SOLAS®

Where Speed Begins

2020 PWC CATALOG

Impeller / Jet Pump / Intake Grate

SOLAS
www.solas.com

About SOLAS

SOLAS was founded in 1985 by Dr. Solas Y. J. Lin. SOLAS is now one of the most well known and trusted names in outboard, stern drive propellers and personal watercraft impellers. Our success is largely due to superior design and craftsmanship from team SOLAS.

Located in Taiwan, SOLAS combines world class research and design, highly skilled labor, cost effective material sourcing and a technologically advanced manufacturing facility to deliver the highest quality of products to its customers.

- We listen and care about the needs of our customers. Our passion is to ensure that our customers enjoy the latest advancements.
- SOLAS products are marketed on a global scale.
- SOLAS quality controls are of the highest standards in the impeller and propeller industry.

Designed for Champions

Over the years SOLAS has sponsored many well known professional personal watercraft riders. The valuable feedback we receive from our sponsored professionals are taken into account and evaluated by our research and development team.

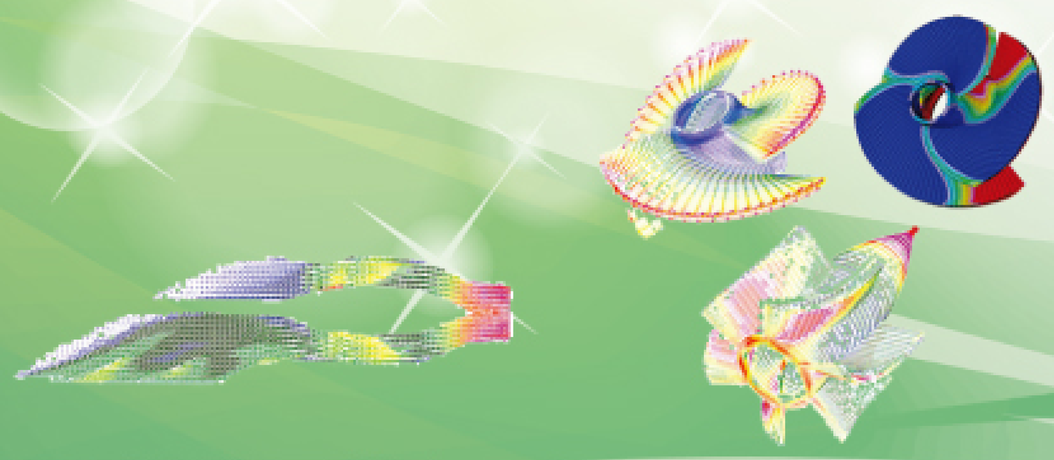

Research and Development

The SOLAS Research and Development Team have elevated Team SOLAS to be the world's largest manufacturer of propellers and impellers in the world. From propellers and impellers to high speed personal watercraft pump systems, SOLAS Research and Development has incorporated advanced production technology, and harsh field-testing into their designs.

With its CAD, CAM, and CAE capabilities, SOLAS will continue to develop high performance products to suit our customers' needs. At SOLAS we are dedicated to manufacturing world class marine propulsion systems.

Quality Control System

SOLAS has implemented a strict quality assurance program which includes all aspects of our manufacturing process including product design, raw material inspection, production monitoring and distribution control. SOLAS has even set up a state of the art testing apparatus to ensure that these strict standards are met. To enhance customer satisfaction, data from these quality control testing procedures are further analyzed to improve future product design and production capability.

SOLAS is and remains certified by BSI, an award given only to the highest quality in manufacturing and production. SOLAS believes that continuous improvement and intensive research is necessary for our company and products to remain the best in the world. SOLAS is always willing to adapt and grow with it's customers.

ISO 9001 CERTIFIED

We are honored to have BSI (British Standards Institution) ISO 9001 certificate and the Symbol of Excellent Products from Taiwan Government. Total satisfaction of our customers is always our first priority.

CERTIFICATE OF REGISTRATION

Quality Management System

Continuous Product Improvement

SOLAS has a wide range of propulsion designs from straight pitch impellers (like the Super Camber series, X Prop, and Concord) to our newly developed Dynafly series. SOLAS continually develops and improves its impellers.

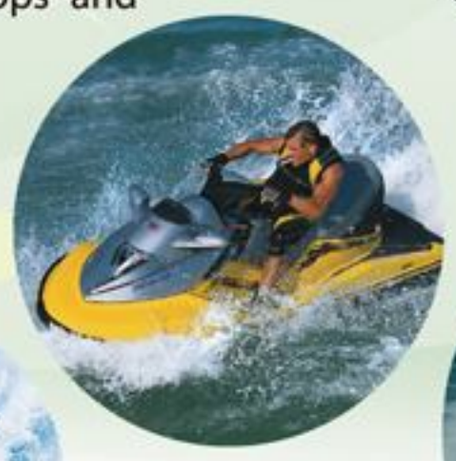

Concord - The Power Torque Series

With features like a large blade area and a unique geometric blade design, the SOLAS Concord Impeller delivers remarkable thrust and extraordinary efficiency. As four stroke technology becomes mainstream in the PWC world, the Concord design truly enhances the engine characteristics, not only delivering incredible acceleration but excellent top end performance. From water skiing to high speed cruising, this technologically advanced power torque design with its radial leading edge will offer everything you could ask for in an impeller.

YF-CD

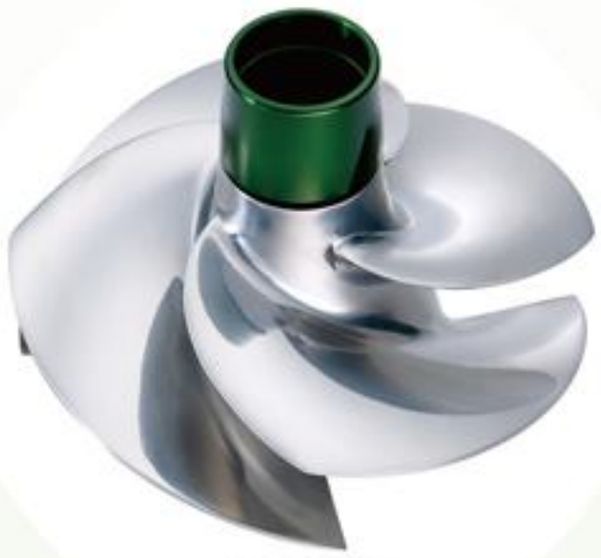

SRX-CD

HA-CD

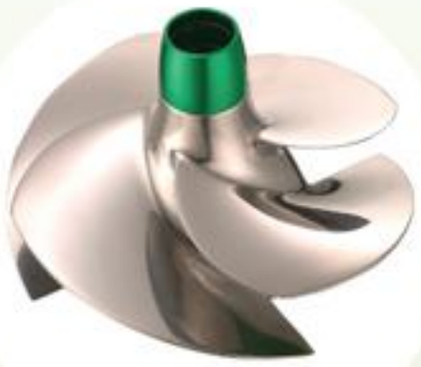

SR-CD

KG-CD

YS-CD

PF-CD

Dynafly - - Maximum Acceleration

Our new impeller is designed to give high compression ratio pumps a stronger acceleration with less cavitation. This impeller is capable of giving your PWC an incredible boost in its performance. The SOLAS product line includes Dynafly impellers for the Kawasaki Ultra 150 pump and the Sea Doo 951 pump. SOLAS also has developed new impellers for other pumps. Please check the application chart for further details.

YG-DF

KH-DF

KP-DF

ST-DF

X-prop - High Speed & Ultimate Performance

The SOLAS X prop gives you the most powerful propulsion in the water from an advanced design that incorporates a high compression hub and cambered blades. Enthusiasts looking for speed and acceleration from the novice to the professional, will be satisfied using this impeller. You can trust the harsh field testing of the X prop by Team SOLAS.

SD-SC-XO

SD-SC-X

Super Camber S-I-J-K-H - The Last Word of Impeller Evolution

The patented Super Camber S-I-J-K-H series with the rubber seal are even more streamlined. This reduces drag for the impeller while increasing volumetric flow of the pump at the same time, making the SOLAS Super Camber series arguably the best in the PWC market.

SD-SC-J

YB-SC-I

Super Camber A-B-C-D-E - For a Cost Effective Solution

The Super Camber A-B-C-D-E series remains one of the most popular products in the personal watercraft market. The Super Camber blade has increased flow and the thrust of the impeller.

YA-SC-A

SD-SC-B

TECH NEWS

KX-CD-15/23,16/24 - - Make the Speed Up

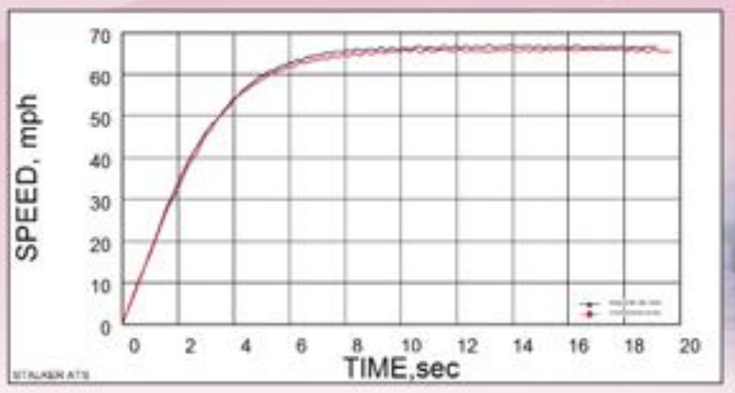

The SOLAS KX-CD-15/23 and KX-CD-16/24 deliver more power and stronger acceleration for the 4-stroke KAWASAKI ULTRA 260X/260LX; ULTRA 250X, the SOLAS impeller offers even more acceleration and a much better top end performance.

YS-CD-13/22, 14/23 - - Make the Best Better

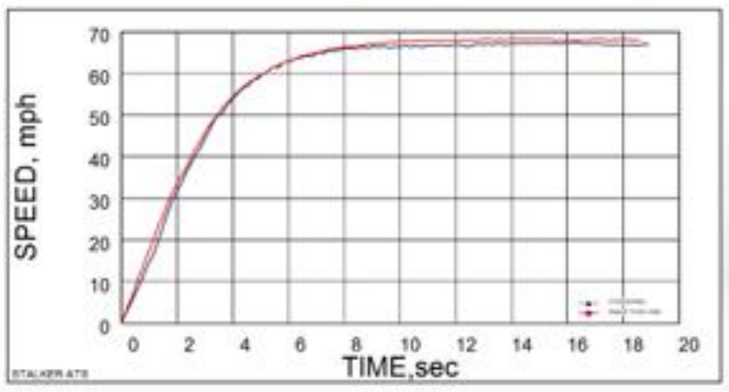

The SOLAS Concord Impeller will give the top rated Yamaha SHO,SHO FZR/FZS; FX CRUISER Hight Output better hole shot, faster acceleration, and better top end performance. The SOLAS impeller can deliver much more power, gain speed, and correct cavitation problems. It features large area blades and special pitch distribution, plus it has a low friction polished mirror surface.

SR-CD-12/20, 11/19 - - Silent Raider

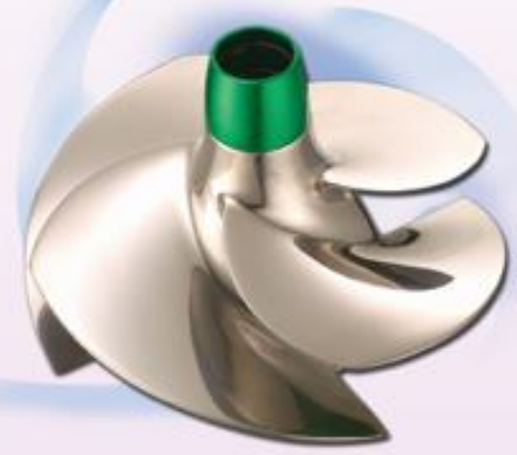

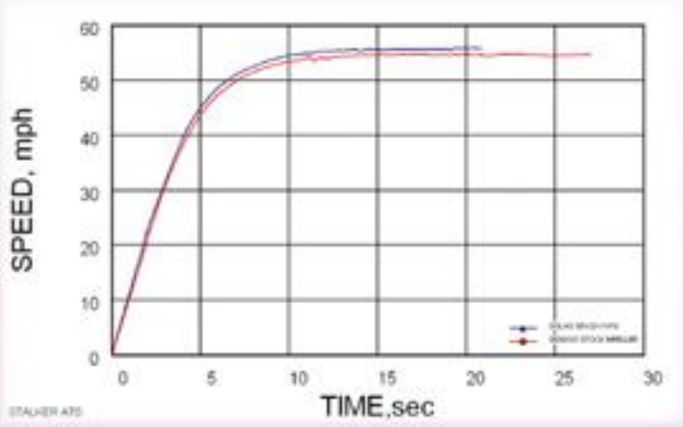

For the SEADOO 4-Tech, SOLAS developed the SR-CD-12/20 for the supercharged PWC and the SR-CD-11/19 for the stock 4-Tech. These newly developed 4 blade impellers offer better acceleration and top end performance. Solas has developed a new model of impellers specifically for 4 stroke PWCs. These impellers allow 4-stroke motors to achieve their full potential and best possible performance. These impellers will enhance the performance of your PWC.

KGX-HSV-148/74
for KAWASAKI

KGX-PM-148/74T
for KAWASAKI

High Performance JET PUMP

High Performance, durable, and affordable products are our commitment by Team SOLAS to our customers. With this commitment in mind, SOLAS proudly presents a new product line of jet pump series, for the personal watercraft market.

This new line of products is based on modern hydrodynamics design and intensive field testing from our SOLAS PWC racing champions. We are offering all-around high performance not only to professionals, but to our recreational PWC customers as well.

SX-HS-161
for SEADOO

YRS-SV-148/74
for YAMAHA

YQS-SV-144/74
for YAMAHA

YVS-HS-160
for YAMAHA

SX-PM161/83
for SEADOO

SK-SV-140/75
for SEADOO

☼ **Check P.19 ~ P.21 for detailed applications.**

Intake Grates - - Ensure Maximum Flow

SOLAS' commitment to performance does not simply mean just speed. It means handling, dependability, durability, smooth operation, and much more. SOLAS intake grates are made of cast aluminum. Each is finished with an epoxy powder coating which makes SOLAS intake grates highly resistant to corrosion and abrasion.

Our airfoil section allows more water to flow consistently into the pump in order to eliminate cavitation and improved hook up ability. SOLAS offers several different models.

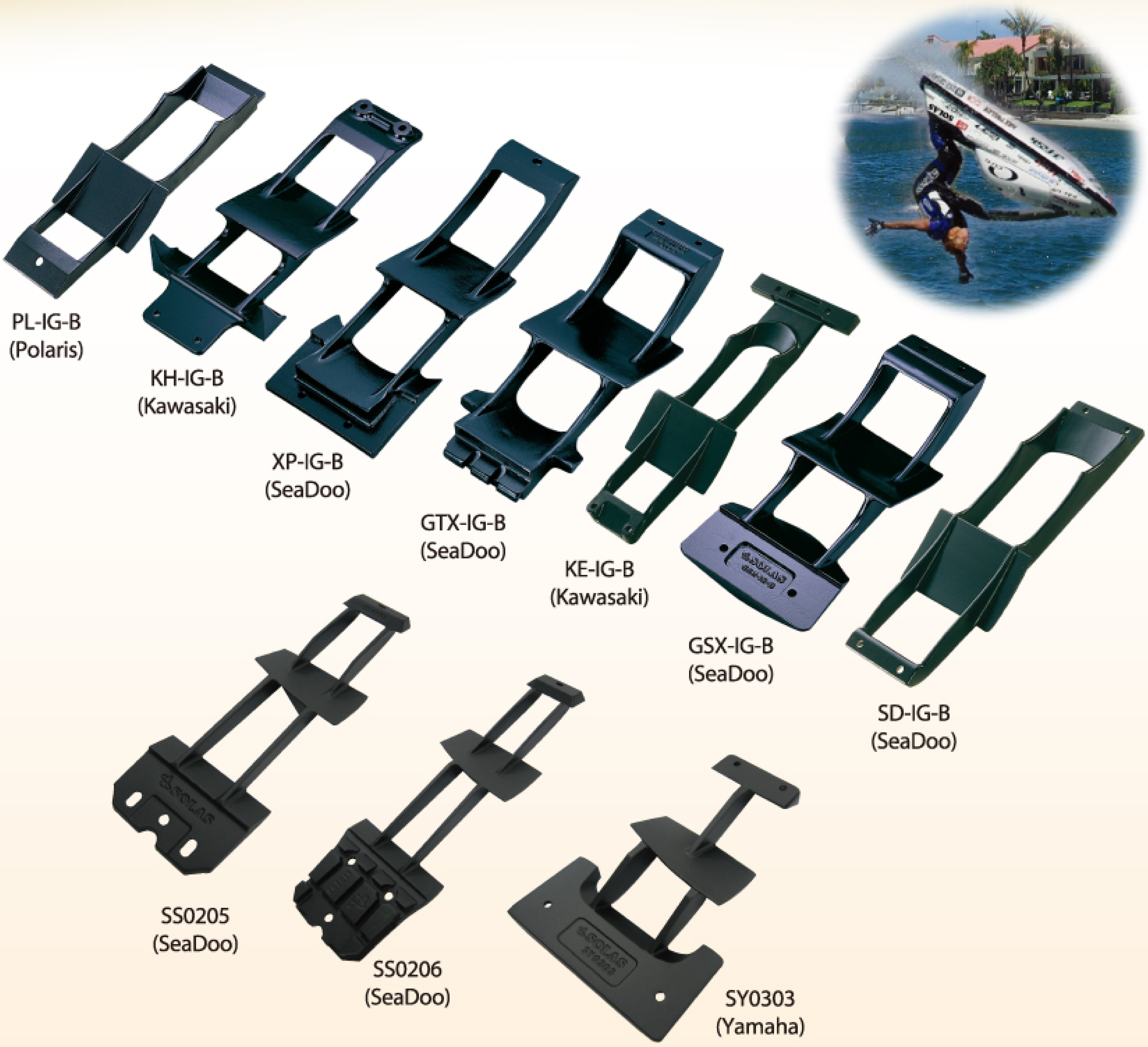

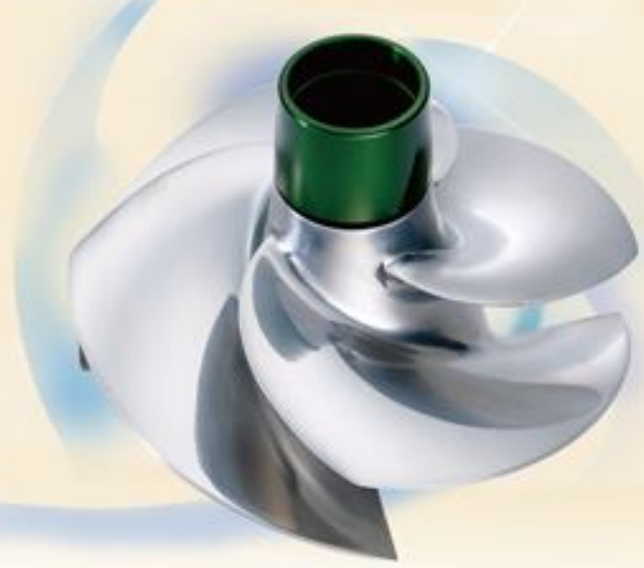

How to select impellers for your personal watercraft:

SOLAS is committed to producing personal watercraft impellers of the highest quality to provide the ultimate in PWC performance. SOLAS impellers are race proven around the world for their extreme durability and superior efficiency.

To provide your personal watercraft with the best possible performance, SOLAS offers the following guide to selecting the suitable impeller for your PWC:

Selection Consideration	Impeller Solution
Q1: Engine RPM is too high or is exceeding manufacturers' recommendations at full throttle.	A1: Increase impeller pitch.
Q2: Engine RPM is too low or not reaching its rated RPM at full throttle.	A2: Decrease impeller pitch.
Q3: High altitude operation.	A3: Decrease impeller pitch.
Q4: Cold weather operation.	A4: Increase impeller pitch.
Q5: Top speed and performance under all conditions.	A5: Increase or decrease impeller pitch to reach the manufacturer's recommended RPM at full throttle.

SOLAS®
Where Speed Begins

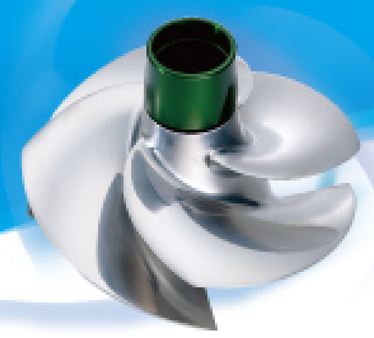

www.solas.com

SEA-DOO

Impellers

SEA DOO is a registered trademark of Bombardier Recreational Products Inc.

Engine cc	Model	Year	Pump Diameter	Series	Blades	STOCK Engine	* LIMITED or MODIFIED Engine *			
1630	RXP-X 300 / RXT-X 300 / GTX LIMITED 300	2016~	161mm	CONCORD	3	SXX-CD-13/18	SXX-CD-13/16	SXX-CD-14/19		
		2016~		CONCORD	4	SX4-CD-13/16	SX4-CD-11/16			
1494	RXT-230 /GTX-230	2019~	161mm	CONCORD	4	SX4-CD-11/16	SX4-CD-13/16			
	GTR 230/GTR-X 230	2017~	161mm	CONCORD	4	SX4-CD-11/16	SX4-CD-13/16			
	WAKE PRO 230hp	2019~	161mm	CONCORD	3	SXX-CD-13/18	SXX-CD-13/16	SXX-CD-14/19		
		2019~		CONCORD	4	SX4-CD-13/16	SX4-CD-11/16			
	RXT IS 260 / RXT-X 260 / RXT 260 / RXT-X aS260	2009~	159mm	CONCORD	4	SRZ-CD-15/21A	SRZ-CD-13/18A	SRZ-CD-14/19A	SRZ-CD-15/20A	SRZ-CD-16/21A
	GTX LTD IS 255 / GTX LTD iS 260	2009~		CONCORD	4	SRZ-CD-15/21A	SRZ-CD-13/18A	SRZ-CD-14/19A	SRZ-CD-15/20A	SRZ-CD-16/21A
	RXP-X 255 / RXP-X 260	2009~2015		CONCORD	4	SRZ-CD-15/21A	SRZ-CD-13/18A	SRZ-CD-14/19A	SRZ-CD-15/20A	SRZ-CD-16/21A
	RXP(215HP)	2009~2010		CONCORD	4	SRZ-CD-14/19A	SRZ-CD-13/18A	SRZ-CD-15/20A	SRZ-CD-15/21A	SRZ-CD-16/21A
	RXT(215HP)	2009~2010		CONCORD	4	SRZ-CD-13/18A	SRZ-CD-14/19A	SRZ-CD-15/20A	SRZ-CD-15/21A	SRZ-CD-16/21A
	WAKE PRO(215hp)/ WAKE PRO(230hp)	2009~2018		CONCORD	4	SRZ-CD-13/18A	SRZ-CD-14/19A	SRZ-CD-15/20A	SRZ-CD-15/21A	SRZ-CD-16/21A
	GTX 215 / GTX IS 215 / GTX LTD 215/ GTX LTD 230	2009~2018		CONCORD	4	SRZ-CD-13/18A	SRZ-CD-14/19A	SRZ-CD-15/20A	SRZ-CD-15/21A	SRZ-CD-16/21A
	GTR(215HP)	2012-2016		CONCORD	4	SRZ-CD-14/19A	SRZ-CD-13/18A	SRZ-CD-15/20A	SRZ-CD-15/21A	SRZ-CD-16/21A
	RXP-X	2008		CONCORD	4	SRX-CD-15/21	SRX-CD-13/18	SRX-CD-14/19	SRX-CD-15/20	SRX-CD-16/21
	RXT-X	2008		CONCORD	4	SRX-CD-14/19	SRX-CD-13/18	SRX-CD-15/20	SRX-CD-15/21	SRX-CD-16/21
	RXP(215HP)	2004-2009		CONCORD	4	SRX-CD-14/19	SRX-CD-13/18	SRX-CD-15/20	SRX-CD-15/21	SRX-CD-16/21
	RXT(215HP)	2005-2009		CONCORD	4	SRX-CD-13/18	SRX-CD-14/19	SRX-CD-15/20	SRX-CD-15/21	SRX-CD-16/21
	GTX Limited(215HP)	2005-2009		CONCORD	4	SRX-CD-13/18	SRX-CD-14/19	SRX-CD-15/20	SRX-CD-15/21	SRX-CD-16/21
	WAKE SUPERCHARGED(215HP)	2007-2016		CONCORD	4	SRX-CD-13/18	SRX-CD-14/19	SRX-CD-15/20	SRX-CD-15/21	SRX-CD-16/21
	GTX 4-tech Limited Supercharge(185HP)	2003-2004	155.5mm	CONCORD	4	SR-CD-12/20	SR-CD-10/18	SR-CD-11/19	SR-CD-13/21	
	GTX 4-tech Supercharge(185HP)	2003-2006		CONCORD	4	SR-CD-12/20	SR-CD-10/18	SR-CD-11/19	SR-CD-13/21	
	RXP(155HP)	2007-2008		CONCORD	4	SR-CD-11/19	SR-CD-10/18	SR-CD-12/20	SR-CD-13/21	
	GTS 130 / GTS PRO 130	2011-2016		CONCORD	4	SR-CD-11/19	SR-CD-10/18	SR-CD-12/20	SR-CD-13/21	
	wake(155HP)	2008-		CONCORD	4	SR-CD-11/19	SR-CD-10/18	SR-CD-12/20	SR-CD-13/21	
	GTX 155	2002-2009		CONCORD	4	SR-CD-11/19	SR-CD-10/18	SR-CD-12/20	SR-CD-13/21	
	GTX 155	2018		CONCORD	4	SR-CD-11/19	SR-CD-10/18	SR-CD-12/20	SR-CD-13/21	
	GTX 155 / GTX S 155	2010-2017		CONCORD	4	SRB-CD-11/19				
	GTI LTD 155 / GTI SE 155	2008-		CONCORD	4	SR-CD-10/18	SR-CD-11/19	SR-CD-12/20	SR-CD-13/21	
	GTI / GTI SE 130 /GTI SE/GTI STD/GTI 4-TEC SE/ GTI 4-TEC STD/GTI 4-TEC RENTAL/ GTI 130/GTI Rental 130	2006-		CONCORD	4	SR-CD-10/18	SR-CD-11/19	SR-CD-12/20	SR-CD-13/21	
951	RXX	2001-2002	148mm	CONCORD	3	KG-CD-15/21	KG-CD-14/21	KG-CD-16/22		
	XP / XP DI	2000-2004	155.5mm	CONCORD	3	ST-CD-15/20	ST-CD-10/16	ST-CD-14/19	ST-CD-16/21	ST-CD-17/22
				DYNAFLY	3	ST-DF-13/19	ST-DF-12/18	ST-DF-14/20		
	RX / RX DI	2000-2003		CONCORD	3	ST-CD-15/20	ST-CD-10/16	ST-CD-14/19	ST-CD-16/21	ST-CD-17/22
				DYNAFLY	3	ST-DF-13/19	ST-DF-12/18	ST-DF-14/20		
	GTX/GTX DI	2000-2003		CONCORD	3	ST-CD-15/20	ST-CD-10/16	ST-CD-14/19	ST-CD-16/21	ST-CD-17/22
				DYNAFLY	3	ST-DF-13/19	ST-DF-12/18	ST-DF-14/20		
	GSX Ltd. / GTX Ltd. / XP Ltd.	98-99		CONCORD	3	ST-CD-15/20	ST-CD-10/16	ST-CD-14/19	ST-CD-16/21	ST-CD-17/22
				X Prop	3	ST-SC-X0(14.5-17.5)	ST-SC-XI(15.5-18.5)			
	LRV / LRV DI	99-2003		CONCORD	3	ST-CD-14/19	ST-CD-10/16	ST-CD-15/20	ST-CD-16/21	ST-CD-17/22
				X Prop	3	ST-SC-X0(14.5-17.5)	XI(15.5-18.5)			
900	GTI 90/GTS 90	2017-	150mm	CONCORD	3	◎ SG-CD-10/16				
	SPARK ACE 900 / SPARK ACE 900 HO SPARK TRIXX	2014-	140mm	CONCORD	3	SK-CD-12/17	SK-CD-12/14	SK-CD-13/18		
782	3D / 3D BASE	2005-2007	155.5mm	CONCORD	3	ST-CD-10/16	ST-CD-14/19	ST-CD-15/20	ST-CD-16/21	ST-CD-17/22
	GSX RFI / GTX RFI	99-2000	140mm	CONCORD	3	SF-CD-15/23	SF-CD-16/24	SF-CD-17/25		
	XP / SPX / GSX	96-98	140mm	CONCORD	3	SD-CD-15/23	SD-CD-13/21	SD-CD-14/22	SD-CD-16/24	SD-CD-17/25
				X Prop	3	SD-SC-X0(16.5-23.5)	SD-SC-X(16-23)	SD-SC-XI(17-24)		
	GTX / GTX PRO	96-98		CONCORD	3	SD-CD-14/22	SD-CD-13/21	SD-CD-15/23	SD-CD-16/24	SD-CD-17/25
				X Prop	3	SD-SC-X0(16.5-23.5)	SD-SC-X(16-23)	SD-SC-XI(17-24)		
720	GTI / GTI LE / GTI RFI	2001-2005	155.5mm	CONCORD	3	ST-CD-10/16	ST-CD-14/19	ST-CD-15/20	ST-CD-16/21	ST-CD-17/22
	GTS	2001-2002		CONCORD	3	ST-CD-10/16	ST-CD-14/19	ST-CD-15/20	ST-CD-16/21	ST-CD-17/22
	XP / SPX	95-97	140mm	CONCORD	3	SD-CD-14/22	SD-CD-13/21	SD-CD-15/23	SD-CD-16/24	SD-CD-17/25
				X Prop	3	SD-SC-X(16-23)	SD-SC-X0(16.5-23.5)	SD-SC-XI(17-24)		
				IJK SERIES	3	SD-SC-I(14-19)	SD-SC-J(15-20)	SD-SC-K(16-21)		
	GS / GSI	99~2001		CONCORD	3	SF-CD-15/23	SF-CD-16/24	SF-CD-17/25		
		97-98		CONCORD	3	SD-CD-14/22	SD-CD-13/21	SD-CD-15/23	SD-CD-16/24	SD-CD-17/25
				X Prop	3	SD-SC-X(16-23)	SD-SC-X0(16.5-23.5)	SD-SC-XI(17-24)		
				IJK SERIES	3	SD-SC-I(14-19)	SD-SC-J(15-20)	SD-SC-K(16-21)		
	GTI / GTS	99~2001		CONCORD	3	SF-CD-15/23	SF-CD-16/24	SF-CD-17/25		
		97-98		CONCORD	3	SD-CD-14/22	SD-CD-13/21	SD-CD-15/23	SD-CD-16/24	SD-CD-17/25
				X Prop	3	SD-SC-X(16-23)	SD-SC-X0(16.5-23.5)	SD-SC-XI(17-24)		
				IJK SERIES	3	SD-SC-I(14-19)	SD-SC-J(15-20)	SD-SC-K(16-21)		
	HX	95~		X Prop	3	SD-SC-X(16-23)	SD-SC-X0(16.5-23.5)	SD-SC-XI(17-24)		
				IJK SERIES	3	SD-SC-I(14-19)	SD-SC-J(15-20)	SD-SC-K(16-21)		

◎ Original Seal Required

* Lower pitch than stock can be used for high altitude or high temperature application where H.P. is lost when applicable *
* Lower pitch than stock can be used for watercraft with reflashed ECU that increases rev limiter for more rpm than stock when applicable *
* Higher pitch than stock can be used for modified watercraft with higher HP than stock *

Engine cc	Model	Year	Pump Diameter	Series	Blades	STOCK Engine	* LIMITED or MODIFIED Engine *	
650	XP	93-94	140mm	IJK SERIES	3	SD-SC-I(14-19)	SD-SC-J(15-20)	SD-SC-K(16-21)
	SPX	94-95		IJK SERIES	3	SD-SC-I(14-19)	SD-SC-J(15-20)	SD-SC-K(16-21)
	GSX	94-95		IJK SERIES	3	SD-SC-I(14-19)	SD-SC-J(15-20)	SD-SC-K(16-21)
	GTX	94-95		IJK SERIES	3	SD-SC-I(14-19)	SD-SC-J(15-20)	SD-SC-K(16-21)
580	XP	91-92	140mm	ABC SERIES	3	SD-SC-A(13-18)	SD-SC-B(14-19)	SD-SC-C(15-20)
	SPX	93		ABC SERIES	3	SD-SC-A(13-18)	SD-SC-B(14-19)	SD-SC-C(15-20)
	SPI	93-96		ABC SERIES	3	SD-SC-A(13-18)	SD-SC-B(14-19)	SD-SC-C(15-20)
	SP	88-96		ABC SERIES	3	SD-SC-A(13-18)	SD-SC-B(14-19)	SD-SC-C(15-20)
	GSX	92-93		ABC SERIES	3	SD-SC-A(13-18)	SD-SC-B(14-19)	SD-SC-C(15-20)
	GTX	92-93		ABC SERIES	3	SD-SC-A(13-18)	SD-SC-B(14-19)	SD-SC-C(15-20)
	GTS	92-96		ABC SERIES	3	SD-SC-A(13-18)	SD-SC-B(14-19)	SD-SC-C(15-20)
	GT	90-91		ABC SERIES	3	SD-SC-A(13-18)	SD-SC-B(14-19)	SD-SC-C(15-20)

* Lower pitch than stock can be used for high altitude or high temperature application where H.P. is lost when applicable *
* Lower pitch than stock can be used for watercraft with reflashed ECU that increases rev limiter for more rpm than stock when applicable *
* Higher pitch than stock can be used for modified watercraft with higher HP than stock *

SEA-DOO JETBOAT

Engine cc	Model	Horse Power	Year	Pump Diameter	Series	Blades	STOCK Engine
4-TEC / 1494cc	205 Utopia / Utopia SE	2 X 215HP	2007~	159mm	CONCORD	4	SRX-CD-14/19
	180 Challenger / Challenger SE	215 HP	2007~	159mm	CONCORD	4	SRX-CD-14/19
	230 Challenger / Challenger SE	2 X 215HP	2007~	159mm	CONCORD	4	SRX-CD-14/19
		2 X 155HP		155.5mm	CONCORD	4	SR-CD-11/19
	230 Wake	2 X 215HP	2007~	159mm	CONCORD	4	SRX-CD-14/19
		2 X 155HP		155.5mm	CONCORD	4	SR-CD-11/19
	Islandia SE	2 X 155HP	2007~	155.5mm	CONCORD	4	SR-CD-11/19
	SPEEDSTER 150	155HP	2007~	155.5mm	CONCORD	4	SR-CD-11/19
		215 HP	2007~	159mm	CONCORD	4	SRX-CD-14/19
	SPEEDSTER 200	2 X 215HP	2007~	159mm	CONCORD	4	SRX-CD-14/19
		2 X 155HP	2004~	155.5mm	CONCORD	4	SR-CD-11/19
	SPEEDSTER WAKE	2 X 215HP	2006~	159mm	CONCORD	4	SRX-CD-14/19
	SPORTSTER 4-TEC	155HP	2004-2005	155.5mm	CONCORD	4	SR-CD-11/19
951	Sportster LE DI		2000-2005	155.5mm	CONCORD	3	ST-CD-15/20
780(2)	Speedster		98-99	140mm	CONCORD	3	SF-CD-15/23
	Challenger 1800		97-99		CONCORD	3	SD-CD-15/23
					X Prop	3	SD-SC-X0(16.5-23.5)
780	Challenger		95-97		X Prop	3	SD-SC-X0(16.5-23.5)
720(2)	Speedster SK		99	140mm	X Prop	3	SD-SC-X(16-23)
	Speedster 1800		99		X Prop	3	SD-SC-X(16-23)
	Sportster LT		2002		X Prop	3	SD-SC-X(16-23)
	Challenger		98-2001		X Prop	3	SD-SC-X(16-23)
	Speedster		96-97		X Prop	3	SD-SC-X(16-23)
720	Explorer		97		X Prop	3	SD-SC-X(16-23)
	Sportster		95-98		X Prop	3	SD-SC-X(16-23)
650(2)	Speedster		94-95	140mm	ABC SERIES	3	SD-SC-A(13-18) R
							SD-SC-B(14-19) L
650	Sportster		95		ABC SERIES	3	SD-SC-A(13-18)
	Explorer		95-96		ABC SERIES	3	SD-SC-A(13-18)
	Explorer		93-95		ABC SERIES	3	SD-SC-A(13-18)

◎ FOR DIFFERENT PITCHES, CHECK P.11 FOR SEADOO IMPELLERS

SG-CD-10/16
for
GTI 90 / GTS 90
2017~
"Original Seal Required"

Mercury Sport Jet Impellers

Engine cc	Model	Year	Pump Diameter	Series	Blades	STOCK Engine
90 HP	90 Jet (Spline)	1993-1995		CONCORD	3	MB-SC-A
175 HP	175 XR2 Jet	1997-2000		CONCORD	3	MC-CD-18/27
Mercury V6 250HP 240HP 210HP 200HP (M2 Jet)	Speedster	2000-2002	184mm	CONCORD	4	MC-CD-22/39
	Speedster SK	2000		CONCORD	4	MC-CD-22/39
	Speedster 160	2004		CONCORD	4	MC-CD-22/39
	Challenger 1800	2000-2005		CONCORD	4	MC-CD-22/39
	Challenger 2000	2000-2005		CONCORD	4	MC-CD-22/39
	Challenger X	2004-2005		CONCORD	4	MC-CD-22/39
	Sportster 1800	2000		CONCORD	4	MC-CD-22/39
	Utopia 205	2002-2005		CONCORD	4	MC-CD-22/39
	Utopia 185	2001-2005		CONCORD	4	MC-CD-22/39
	Islandia	2001-2005		CONCORD	4	MC-CD-22/39

Mercury SportJet is a registered trademark of Merucry Marine, Inc.

MC-CD-22/39
for
Mercury Sportjet

"This is a highly efficient 4-blade, Stainless Steel, progressive pitch impeller delivering excellent thrust and superior overall performance for the Mercury SportJet model jet drive."

SOLAS®
Where Speed Begins

www.solas.com

YAMAHA Impellers

YAMAHA is a registered trademark of Yamaha Corporation.

Engine cc	Model	Year	Pump Diameter	Series	Blades	STOCK Engine	* LIMITED or MODIFIED Engine *		
1812	GP1800	2016~	160mm	CONCORD	3	YV-CD-13/20	YV-CD-13/18	YV-CD-14/21	
	VX CRUISER HO	2016~	155mm	CONCORD	3	YS-CD-13/19	YS-CD-13/22	YS-CD-14/23	
	FX SVHO / FX CRUISER SVHO /FX LIMITED SVHO	2014~	160mm	CONCORD	3	YV-CD-13/20	YV-CD-13/18	YV-CD-14/21	
	FX HO / FX CRUISER HO	2009~	155mm	CONCORD	3	YS-CD-13/19	YS-CD-13/22	YS-CD-14/23	
	VXR/ VXS	2011~	155mm	CONCORD	3	YS-CD-13/19	YS-CD-13/22	YS-CD-14/23	
	FZR / FZS	2014~2016	160mm	CONCORD	3	YV-CD-13/20	YV-CD-13/18	YV-CD-14/21	
		2008~2013	155mm	DYNAFLY	3	YS-DF-14/21	YS-DF-15/22		
				CONCORD		YS-CD-13/22	YS-CD-13/19	YS-CD-14/23	
	FX SHO / FX CRUISER SHO	2008-	155mm	DYNAFLY	3	YS-DF-14/21	YS-DF-15/22		
				CONCORD		YS-CD-13/22	YS-CD-13/19	YS-CD-14/23	
1300	Wave Runner GP1300R, GP1300	2005~2008	155mm	DYNAFLY	3	YG-DF-14/20	YG-DF-09/13	YG-DF-15/22	
		2003-2004		CONCORD	3	YF-CD-13/19	YF-CD-11/14	YF-CD-12/18	YF-CD-14/20
1200	Wave Runner XLT 1200	99-2005	155mm	CONCORD	3	YF-CD-12/18	YF-CD-11/14	YF-CD-13/19	YF-CD-14/20
	Wave Runner GP1200R	2000-2002		CONCORD	3	YF-CD-13/19	YF-CD-11/14	YF-CD-12/18	YF-CD-14/20
	Wave Runner SUV1200	99-2004		CONCORD	3	YF-CD-12/18	YF-CD-11/14	YF-CD-13/19	YF-CD-14/20
	Wave Runner XL1200	98-99		CONCORD	3	YF-CD-12/18	YF-CD-11/14	YF-CD-13/19	YF-CD-14/20
	Wave Runner GP1200	97-99		CONCORD	3	YD-CD-13/19	YD-CD-11/14	YD-CD-12/18	YD-CD-14/20
				X Props	3	YD-SC-X0(14.5-17.5)	YD-SC-X(13-16)	YD-SC-XI(15.5-18.5)	
	Wave Runner GP1200R	99		CONCORD	3	YD-CD-13/19	YD-CD-11/14	YD-CD-12/18	YD-CD-14/20
				X Props	3	YD-SC-X0(14.5-17.5)	YD-SC-X(13-16)	YD-SC-XI(15.5-18.5)	
1100	Wave Raider 1100 / Wave Venture 1100	95-97	155mm	CONCORD	3	YD-CD-12/18	YD-CD-11/14	YD-CD-13/19	YD-CD-14/20
				X Props	3	YD-SC-X(13-16)	YD-SC-X0(14.5-17.5)	YD-SC-XI(15.5-18.5)	
				IJK SERIES	3	YD-SC-I(13-19)	YD-SC-S(12-18.5)	YD-SC-J(14-20)	
1052	FX High Output	2004~2008	155mm	DYNAFLY	3	YG-DF-14/20	YG-DF-09/13	YG-DF-15/22	
	FX CRUISER High Output	2004~2008		DYNAFLY	3	YG-DF-14/20	YG-DF-09/13	YG-DF-15/22	
	VX / VX sport / VX Deluxe / VX Crusier	2005~2015		CONCORD	3	YH-CD-18/22			
	V1 / V1 SPORT	2015		CONCORD	3	YH-CD-18/22			
1049	EXR	2019~	144mm	CONCORD	3	YX-CD-12/17 NEW!			
	EX/ EX DELUXE/ EX SPORT	2017~	144mm	CONCORD	3	YJ-CD-12/20	YJ-CD-12/17		
	VX LIMITED/VX CRUISER/VX DELUXE/VX	2016~	155mm	DYNAFLY	3	YG-DF-09/13	YG-DF-14/20	YG-DF-15/22	
	V1 / V1 SPORT	2016		DYNAFLY	3	YG-DF-09/13	YG-DF-14/20	YG-DF-15/22	
998	FX-140 / FX / FX Cruiser	2003~2008	155mm	CONCORD	3	YF-CD-12/18	YF-CD-11/14	YF-CD-13/19	YF-CD-14/20
800	Wave Runner GP800R	2001-2005	155mm	CONCORD	3	YF-CD-11/14	YF-CD-12/18	YF-CD-13/19	YF-CD-14/20
	Wave Runner XL800	2000-2004		CONCORD	3	YF-CD-11/14	YF-CD-12/18	YF-CD-13/19	YF-CD-14/20
	Wave Runner GP800	98-2000	144mm	CONCORD	3	YB-CD-14/18	YB-CD-13/17	YB-CD-15/19	YB-CD-16/20
				X Props	3	YB-SC-X0(15.5-18.5)	YB-SC-X(15-18)	YB-SC-XI(16-19)	
				IJK SERIES	3	YB-SC-J(14.7-18.5)	YB-SC-S(14-17)	YB-SC-I(14.5-18)	YB-SC-K(15-19)
	Wave Runner XL800	98-99		CONCORD	3	YB-CD-13/17	YB-CD-14/18	YB-CD-15/19	YB-CD-16/20
				X Props	3	YB-SC-X(15-18)	YB-SC-X0(15.5-18.5)	YB-SC-XI(16-19)	
				IJK SERIES	3	YB-SC-I(14.5-18)	YB-SC-S(14-17)	YB-SC-J(14.7-18.5)	YB-SC-K(15-19)
760	Wave Runner GP760	97-2000	144mm	CONCORD	3	YB-CD-13/17	YB-CD-14/18	YB-CD-15/19	YB-CD-16/20
				X Props	3	YB-SC-X(15-18)	YB-SC-X0(15.5-18.5)	YB-SC-XI(16-19)	
				IJK SERIES	3	YB-SC-I(14.5-18)	YB-SC-S(14-17)	YB-SC-J(14.7-18.5)	YB-SC-K(15-19)
	Wave Raider 760	95		IJK SERIES	3	YB-SC-I(14.5-18)	YB-SC-S(14-17)	YB-SC-J(14.7-18.5)	YB-SC-K(15-19)
	Wave Runner XL760 / Wave Venture 760	98-99	155mm	CONCORD	3	YD-CD-11/14	YD-CD-12/18	YD-CD-13/19	YD-CD-14/20
				X Props	3	YD-SC-X(13-16)	YD-SC-X0(14.5-17.5)	YD-SC-XI(15.5-18.5)	
				IJK SERIES	3	YD-SC-S(12-18.5)	YD-SC-I(13-19)	YD-SC-J(14-20)	
	Wave Blaster II	96-97		CONCORD	3	YD-CD-11/14	YD-CD-12/18	YD-CD-13/19	YD-CD-14/20
				X Props	3	YD-SC-X(13-16)	YD-SC-X0(14.5-17.5)	YD-SC-XI(15.5-18.5)	
				IJK SERIES	3	YD-SC-S(12-18.5)	YD-SC-I(13-19)	YD-SC-J(14-20)	
701	VX 700	2006~	155mm	CONCORD	3	YH-CD-11/14			
	Wave Raider 700 / Wave Deluxe / Venture	94-97	144mm	CONCORD	3	YB-CD-13/17	YB-CD-14/18	YB-CD-15/19	YB-CD-16/20
				X Props	3	YB-SC-X(15-18)	YB-SC-X0(15.5-18.5)	YB-SC-XI(16-19)	
				IJK SERIES	3	YB-SC-J(14.7-18.5)	YB-SC-S(14-17)	YB-SC-I(14.5-18)	YB-SC-K(15-19)
	Wave Blaster / Wave Runner III GP / Pro VXR	93-97		CONCORD	3	YB-CD-13/17	YB-CD-14/18	YB-CD-15/19	YB-CD-16/20
				X Props	3	YB-SC-X(15-18)	YB-SC-X0(15.5-18.5)	YB-SC-XI(16-19)	
				IJK SERIES	3	YB-SC-I(14.5-18)	YB-SC-I(14.5-18)	YB-SC-J(14.7-18.5)	YB-SC-K(15-19)
	SuperJet (FREESTYLE APPLICATION)	2008~		CONCORD	3	YQ-CD-09/15	YQ-CD-10/16		
	SuperJet	2008~		CONCORD	3	YQ-CD-12/18	YQ-CD-13/19		
		94-2007		CONCORD	3	YB-CD-13/17	YB-CD-14/18	YB-CD-15/19	YB-CD-16/20
				IJK SERIES	3	YB-SC-I(14.5-18)	YB-SC-S(14-17)	YB-SC-J(14.7-18.5)	YB-SC-K(15-19)
	Wave Runner XL700	99-2005	155mm	CONCORD	3	YD-CD-11/14	YD-CD-12/18	YD-CD-13/19	YD-CD-14/20
650	Wave Runner III	90-97	144mm	IJK SERIES	3	YB-SC-S(14-17)	YB-SC-I(14.5-18)	YB-SC-J(14.7-18.5)	YB-SC-K(15-19)
	SuperJet	90-93		IJK SERIES	3	YB-SC-I(14.5-18)	YB-SC-S(14-17)	YB-SC-J(14.7-18.5)	YB-SC-K(15-19)
	VXR	91-95		IJK SERIES	3	YB-SC-S(14-17)	YB-SC-I(14.5-18)	YB-SC-J(14.7-18.5)	YB-SC-K(15-19)
	Wave Jammer 650 / LX 650	ALL	Tapered	ABC SERIES	3	YA-SC-A(13-18)	YA-SC-B(14-19)		
500	Wave Runner 500 / Wave JAMMER 500	ALL	Tapered	ABC SERIES	3	YA-SC-A(13-18)	YA-SC-B(14-19)		

* Lower pitch than stock can be used for high altitude or high temperature application where H.P. is lost when applicable *
* Lower pitch than stock can be used for watercraft with reflashed ECU that increases rev limiter for more rpm than stock when applicable *
* Higher pitch than stock can be used for modified watercraft with higher HP than stock *

YAMAHA JETBOAT

Engine cc	Model	Year	Pump Diameter	Series	Blades	STOCK Engine
1200	Exciter 135	98-2000	155mm	IJK SERIES	3	YD-SC-I(13-19)
1100(2)	Exciter 220	97-98	155mm	IJK SERIES	3	YD-SC-I(13-19)
1200(2)	Exciter 270	98-2000	155mm	X Props	3	YD-SC-X(13-16)
				IJK SERIES	3	YD-SC-I(13-19)
1200(2)	LS2000 / LX2000	1999-2002		CONCORD	3	YD-CD-12/18
				X Props	3	YD-SC-X(13-16)
1200(2)	LX210	2003-2005		CONCORD	3	YD-CD-12/18
				X Props	3	YD-SC-X(13-16)
1200(2)	AR210	2004-2005		CONCORD	3	YD-CD-12/18
				X Props	3	YD-SC-X(13-16)
1200(2)	XR1800	2000-2001		CONCORD	3	YF-CD-13/19
				X Props	3	YF-SC-X(13-16)
998(2)	SX 230 /SR 230/ AR 230	2004-2005	155mm	CONCORD	3	YF-CD-12/18
				X Props	3	YF-SC-X(13-16)
1052(2)	SX210 / AR210 / SR210	2006~2015	155mm	DYNAFLY	3	YG-DF-14/20
	SX230 / AR230 / SR 230	2006		CONCORD	3	YF-CD-13/19
	SX230 HO / AR230 HO / SR 230 HO	2005~2009		DYNAFLY	3	YG-DF-14/20

◎ FOR DIFFERENT PITCHES, CHECK P.13 FOR YAMAHA IMPELLERS

YX-CD Series for : EXR 2019~

YJ-CD Series for : EX/ EX DELUXE/ EX SPORT 2017~

Kawasaki Impellers

kawasaki is a registered trademark of Kawasaki Motors Crop. USA

Engine cc	Model	Year	Pump Diameter	Series	Blades	STOCK Engine	* LIMITED or MODIFIED Engine *			
1498	ULTRA 310X/310X SE/310LX/310R	2014~	160mm	CONCORD	3	KR-CD-14/21	KR-CD-15/22			
	ULTRA 300X / 300LX	2011~2014	160mm	CONCORD	3	KR-CD-14/21	KR-CD-15/22			
	ULTRA 260X/260LX	2008~2010	155mm	CONCORD	3	KX-CD-15/23	KX-CD-16/21	KX-CD-16/24		
	ULTRA 250X	2007~2008		CONCORD	3	KX-CD-15/23	KX-CD-16/21	KX-CD-16/24		
	ULTRA LX	2007~		CONCORD	3	KX-CD-10/16				
	STX-15F	2004~	148mm	CONCORD	3	KG-CD-14/21	KG-CD-13/19	KG-CD-14/20	KG-CD-15/21	KG-CD-16/22
	SX-R	2017~	148mm	CONCORD	3	KGX-CD-15/20	KGX-CD-12/16			
1199	STX-12F	2003~2007	148mm	CONCORD	3	KG-CD-13/19	KG-CD-11/17	KG-CD-12/18	KG-CD-14/20	KG-CD-14/21
1176	ULTRA 150	99-2006	Tapered	DYNAFLY	3	KH-DF-16/20	KH-DF-17/21			
	1200 STX-R	2002-2006	148mm	CONCORD	3	KG-CD-15/21	KG-CD-14/20	KG-CD-14/21	KG-CD-16/22	
				DYNAFLY	3	KG-DF-13/25	KG-DF-14/26			
1071	1100 STX DI	2001-2003	148mm	CONCORD	3	KG-CD-13/19	KG-CD-11/17	KG-CD-12/18	KG-CD-14/20	KG-CD-14/21
				X Props	3	KG-SC-X(16.5-24)	KG-SC-XO(17-24.5)			
	1100 STX	97-98		CONCORD	3	KG-CD-13/19	KG-CD-11/17	KG-CD-12/18	KG-CD-14/20	KG-CD-14/21
				X Props	3	KG-SC-X(16.5-24)	KG-SC-XO(17-24.5)			
	1100 ZXi	96-2003	148mm	CONCORD	3	KG-CD-13/19	KG-CD-11/17	KG-CD-12/18	KG-CD-14/20	KG-CD-14/21
			148mm	X Props	3	KG-SC-X(16.5-24)	KG-SC-XO(17-24.5)			
891	900 STX	2001-2006	148mm	CONCORD	3	KG-CD-12/18	KG-CD-11/17	KG-CD-13/19	KG-CD-14/20	
	900 STX / STS /Zxi	95-2000	140mm	X Props	3	KF-SC-X(16-23)	KF-SC-XO(18-23.5)	KF-SC-XI(19-25)		
				IJK SERIES	3	KF-SC-I(16-21)	KF-SC-J(17-22)			
782	800 SX-R	2003~2011	140mm	DYNAFLY	3	KP-DF-13/22	KP-DF-14/23	KP-DF-15/24		
743	750 Sxi Pro	95-2002	140mm	CONCORD	3	KE-CD-09/15	KE-CD-11/16	KE-CD-12/18	KE-CD-13/20	KE-CD-13/21
				X Props	3	KE-SC-X(14-21)	KE-SC-XI(16-23)			
				IJK SERIES	3	KE-SC-S(13-18)	KE-SC-I(14-19)	KE-SC-J(15-20)		
	750 STS	95-2001		CONCORD	3	KE-CD-11/16	KE-CD-09/15	KE-CD-12/18	KE-CD-13/20	KE-CD-13/21
				X Props	3	KE-SC-X(14-21)	KE-SC-XI(16-23)			
				IJK SERIES	3	KE-SC-S(13-18)	KE-SC-I(14-19)	KE-SC-J(15-20)		
	750 Xi Sport	93-2000		CONCORD	3	KE-CD-11/16	KE-CD-09/15	KE-CD-12/18	KE-CD-13/20	KE-CD-13/21
				X Props	3	KE-SC-X(14-21)	KE-SC-XI(16-23)			
				IJK SERIES	3	KE-SC-S(13-18)	KE-SC-I(14-19)	KE-SC-J(15-20)		
	750 ZXi	95-97		CONCORD	3	KE-CD-11/16	KE-CD-09/15	KE-CD-12/18	KE-CD-13/20	KE-CD-13/21
				X Props	3	KE-SC-X(14-21)	KE-SC-XI(16-23)			
				IJK SERIES	3	KE-SC-S(13-18)	KE-SC-I(14-19)	KE-SC-J(15-20)		
	750 Xi	93-97		CONCORD	3	KE-CD-11/16	KE-CD-09/15	KE-CD-12/18	KE-CD-13/20	KE-CD-13/21
				X Props	3	KE-SC-X(14-21)	KE-SC-XI(16-23)			
				IJK SERIES	3	KE-SC-S(13-18)	KE-SC-I(14-19)	KE-SC-J(15-20)		
	750 SS	92-97		CONCORD	3	KE-CD-09/15	KE-CD-11/16	KE-CD-12/18	KE-CD-13/20	KE-CD-13/21
				ABC SERIES	3	KE-SC-A(13-18)	KE-SC-B(14-19)			
	750 SXi	95-96		CONCORD	3	KE-CD-11/16	KE-CD-09/15	KE-CD-12/18	KE-CD-13/20	KE-CD-13/21
				ABC SERIES	3	KE-SC-A(13-18)	KE-SC-B(14-19)			
	750 SX	92-96		CONCORD	3	KE-CD-11/16	KE-CD-09/15	KE-CD-12/18	KE-CD-13/20	KE-CD-13/21
				IJK SERIES	3	KE-SC-I(14-19)	KE-SC-S(13-18)	KE-SC-J(15-20)		
				ABC SERIES	3	KE-SC-A(13-18)	KE-SC-B(14-19)			
	750 XIR	94		CONCORD	3	KE-CD-11/16	KE-CD-09/15	KE-CD-12/18	KE-CD-13/20	KE-CD-13/21
				IJK SERIES	3	KE-SC-I(14-19)	KE-SC-S(13-18)	KE-SC-J(15-20)		
				ABC SERIES	3	KE-SC-A(13-18)	KE-SC-B(14-19)			
	750 ST	93-95		CONCORD	3	KE-CD-11/16	KE-CD-09/15	KE-CD-12/18	KE-CD-13/20	KE-CD-13/21
				IJK SERIES	3	KE-SC-I(14-19)	KE-SC-S(13-18)	KE-SC-J(15-20)		
				ABC SERIES	3	KE-SC-A(13-18)	KE-SC-B(14-19)			
635	650 TS / 650 SX	87-98	140mm	IJK SERIES	3	KA-SC-I(13-18)	KA-SC-J(14-19)			
				ABC SERIES	3	KA-SC-A(13-18)	KA-SC-B(14-19)			
	650 X-2 / 650JM	91-96		IJK SERIES	3	KA-SC-I(13-18)	KA-SC-J(14-19)			
				ABC SERIES	3	KA-SC-A(13-18)	KA-SC-B(14-19)			
550	550 SX	90-96	Tapered	ABC SERIES	3	KD-SC-A(13-18)	KD-SC-B(14-19)			
	550 JS	82-89		ABC SERIES	3	KB-SC-A(13-18)	KB-SC-B(14-19)			
440	440 JS	77-94	121mm	ABC SERIES	3	KC-SC-A(13-18)				

* Lower pitch than stock can be used for high altitude or high temperature application where H.P. is lost when applicable *
* Lower pitch than stock can be used for watercraft with reflashed ECU that increases rev limiter for more rpm than stock when applicable *
* Higher pitch than stock can be used for modified watercraft with higher HP than stock *

HONDA Impellers

Honda is a registered trademark of Honda Motors Co., Inc.

Engine cc	Model	Year	Pump Diameter	Series	Blades	STOCK Engine	* LIMITED or MODIFIED Engine *
1235	R-12X	2004-2007	155mm	CONCORD	3	HA-CD-17/29	HA-CD-18/30
	F-12X / F-12X GPScape	2002-2004		CONCORD	3	HA-CD-17/29	HA-CD-18/30
	R-12	2002-2004		CONCORD	3	HA-CD-09/18	
	F-12	2002-2004		CONCORD	3	HA-CD-09/18	

POLARIS Impellers

Polaris is a registered trademark of Polaris Industries Inc.

Engine cc	Model	Year	Pump Diameter	Series	Blades	STOCK Engine	* LIMITED or MODIFIED Engine *			
750	MSX 150	2003-2004	148mm	CONCORD	3	PA-CD-13/19	PA-CD-12/18	PA-CD-14/20	PA-CD-15/21	PA-CD-16/22
	MSX 110	2003-2004		CONCORD	3	PA-CD-12/18	PA-CD-13/19	PA-CD-14/20	PA-CD-15/21	PA-CD-16/22
1192	MSX 140	2003-2004	148mm	CONCORD	3	PA-CD-15/21	PA-CD-12/18	PA-CD-13/19	PA-CD-14/20	PA-CD-16/22
1165	Pro 1200	2000-2002	148mm	CONCORD	3	PA-CD-15/21	PA-CD-12/18	PA-CD-13/19	PA-CD-14/20	PA-CD-16/22
				X props	3	PA-SC-XO(16.5-23)	PA-SC-X(14-21)	PA-SC-XI(17-24)		
				UK SERIES	3	PA-SC-I(15-24)	PA-SC-S(14-23)			
	VIRAGE TX / VIRAGE Txi	2000-2002		CONCORD	3	PA-CD-15/21	PA-CD-12/18	PA-CD-13/19	PA-CD-14/20	PA-CD-16/22
				X props	3	PA-SC-XO(16.5-23)	PA-SC-X(14-21)	PA-SC-XI(17-24)		
				UK SERIES	3	PA-SC-I(15-24)	PA-SC-S(14-23)			
	Genesis FFI,	2000		X props	3	PA-SC-XO(16.5-23)	PA-SC-X(14-21)	PA-SC-XI(17-24)		
				UK SERIES	3	PA-SC-I(15-24)	PA-SC-S(14-23)			
	Genesis / Genesis i	99-2004		X props	3	PA-SC-XO(16.5-23)	PA-SC-X(14-21)	PA-SC-XI(17-24)		
				UK SERIES	3	PA-SC-I(15-24)	PA-SC-S(14-23)			
1050	SL / SLX / SLXH / SLTX 1050	97-98	148mm	CONCORD	3	PA-CD-14/20	PA-CD-12/18	PA-CD-13/19	PA-CD-15/21	PA-CD-16/22
				X props	3	PA-SC-X(14-21)	PA-SC-XO(16.5-23)	PA-SC-XI(17-24)		
				UK SERIES	3	PA-SC-S(14-23)	PA-SC-I(15-24)			
900	SL900	96-97	148mm	CONCORD	3	PA-CD-13/19	PA-CD-12/18	PA-CD-14/20	PA-CD-15/21	PA-CD-16/22
				X props	3	PA-SC-X(14-21)	PA-SC-XO(16.5-23)	PA-SC-XI(17-24)		
				UK SERIES	3	PA-SC-S(14-23)	PA-SC-I(15-24)			
779	SLX Pro 785 / SL780 /SLT 780	96-2001	148mm	CONCORD	3	PA-CD-12/18	PA-CD-13/19	PA-CD-14/20	PA-CD-15/21	PA-CD-16/22
				X props	3	PA-SC-X(14-21)	PA-SC-XO(16.5-23)	PA-SC-XI(17-24)		
				UK SERIES	3	PA-SC-S(14-23)	PA-SC-I(15-24)			
777	VIRAGE I	2002-2004	148mm	CONCORD	3	PA-CD-12/18	PA-CD-13/19	PA-CD-14/20	PA-CD-15/21	PA-CD-16/22
	OCTANE	2002-2004		CONCORD	3	PF-CD-15/23				
744	SL 750 / SLT 750 / SL750	94-95	148mm	CONCORD	3	PA-CD-12/18	PA-CD-13/19	PA-CD-14/20	PA-CD-15/21	PA-CD-16/22
				UK SERIES	3	PA-SC-S(14-23)	PA-SC-I(15-24)			
700	VIRAGE / FREEDOM	2000-2004	148mm	CONCORD	3	PA-CD-12/18	PA-CD-13/19	PA-CD-14/20	PA-CD-15/21	PA-CD-16/22
				UK SERIES	3	PA-SC-S(14-23)	PA-SC-I(15-24)			
	SLH	98-2001		CONCORD	3	PA-CD-12/18	PA-CD-13/19	PA-CD-14/20	PA-CD-15/21	PA-CD-16/22
				UK SERIES	3	PA-SC-S(14-23)	PA-SC-I(15-24)			
	SL 700DLX / SL700 / Hurricane	96-97		CONCORD	3	PA-CD-12/18	PA-CD-13/19	PA-CD-14/20	PA-CD-15/21	PA-CD-16/22
				UK SERIES	3	PA-SC-S(14-23)	PA-SC-I(15-24)			

TIGERSHARK Impellers

TIGERSHARK is a registered trademark of Tigershark Co., Inc.

Engine cc	Model	Year	Pump Diameter	Series	Blades	STOCK Engine	* LIMITED or MODIFIED Engine *			
1100	TS 1100R / TS 1100LI	99	148mm	CONCORD	3	PA-CD-14/20	PA-CD-12/18	PA-CD-13/19	PA-CD-15/21	PA-CD-16/22
999	TS 1000L / TS 1000R	98-99	146mm	UK Series	3	TB-SC-I(15.5-19.5)	TB-SC-J(16-20.5)			
	TS 1000R	98		UK Series	3	TB-SC-I(15.5-19.5)	TB-SC-J(16-20.5)			
	Daytona 1000R	98		UK Series	3	TB-SC-I(15.5-19.5)	TB-SC-J(16-20.5)			
	Daytona 1000	97		UK Series	3	TB-SC-I(15.5-19.5)	TB-SC-J(16-20.5)			
	Monte Carlo 1000	97		UK Series	3	TB-SC-I(15.5-19.5)	TB-SC-J(16-20.5)			
896	Monte Carlo 900	96	146mm	UK Series	3	TB-SC-I(15.5-19.5)	TB-SC-J(16-20.5)			
768	TS 770R / TS 770R	98-99	146mm	UK Series	3	TB-SC-I(15.5-19.5)	TB-SC-J(16-20.5)			
	TS 770	98-99		UK Series	3	TB-SC-I(15.5-19.5)	TB-SC-J(16-20.5)			
	Daytona 770R / 770	98		UK Series	3	TB-SC-I(15.5-19.5)	TB-SC-J(16-20.5)			
	Monte Carlo 770	96-97		UK Series	3	TB-SC-I(15.5-19.5)	TB-SC-J(16-20.5)			
639	TS 640/640L	98-99	146mm	UK Series	3	TB-SC-I(15.5-19.5)	TB-SC-J(16-20.5)			
	Montego	97~		UK Series	3	TB-SC-I(15.5-19.5)	TB-SC-J(16-20.5)			
	Montego Deluxe	96-97		UK Series	3	TB-SC-I(15.5-19.5)	TB-SC-J(16-20.5)			
	Monte Carlo 640	96-97		UK Series	3	TB-SC-I(15.5-19.5)	TB-SC-J(16-20.5)			
	Daytona 640	94-95	142mm	UK Series	3	TA-SC-I(14.5-18)	TA-SC-J(15.5-19)			
	Montego	94-96		UK Series	3	TA-SC-I(14.5-18)	TA-SC-J(15.5-19)			
	Montego Deluxe	95-97		UK Series	3	TA-SC-I(14.5-18)	TA-SC-J(15.5-19)			
	Monte Carlo 640	94-95		UK Series	3	TA-SC-I(14.5-18)	TA-SC-J(15.5-19)			
	Barracuda	94-95		UK Series	3	TA-SC-I(14.5-18)	TA-SC-J(15.5-19)			

* Lower pitch than stock can be used for high altitude or high temperature application where H.P. is lost when applicable *
* Lower pitch than stock can be used for watercraft with reflashed ECU that increases rev limiter for more rpm than stock when applicable *
* Higher pitch than stock can be used for modified watercraft with higher HP than stock *

• TWIN IMPELLERS •

FLY Series

Impellers for Flyboard

SEA DOO

SEA DOO is a registered trademark of Bombardier Recreational Products Inc.

SRZ-FY-09/14

SX-FY-09/14

YAMAHA

YAMAHA is a registered trademark of Yamaha Corporation.

YV-FY-09/14

• TWIN IMPELLERS •

TP Series

Recommended for Performance Use

☼ For Flyboard use FLY Series impellers

SEA DOO

SEA DOO is a registered trademark of Bombardier Recreational Products Inc.

SRZ-TP-15/21A
for
RXP-X 260 2012~
RXT IS 260 / RXT-X 260 2009~
RXT 260 / RXT-X aS260 2009~
GTX LTD IS 255 2009~
GTX LTD iS 260 2009~
RXP-X 255 2009~

SX4-TP-13/16
for
RXP-300 / RXT-X 300 / GTX LIMITED 300
2016~

YAMAHA

YAMAHA is a registered trademark of Yamaha Corporation.

YS-TP-14/23
for
FZR / FZS 2008-2013 (155mm)

YV-TP-12/18, YV-TP-12/20
for
FX SVHO / FX CRUISER SVHO 2014
FZR/FZS 2014~

SEA-DOO

Jet Pump

SEA DOO is a registered trademark of Bombardier Recreational Products Inc.

Engine cc	Model	Year	Impeller Application	Recommended SOLAS Pump	Remark
1630	RXP-X 300	2016~	SOLAS SXX CONCORD SOLAS SX4 CONCORD	SX-PM-161/83 (HSV+Nozzle)	14 VANE Diameter = 161mm Hub size = 83mm
	RXT-X 300	2016~			
1494	RXP-X(255HP,260HP)	2008-2015	SOLAS SRZ IMPELLER	SRZ-PM-159/83 (HSV+Nozzle)	14 VANE Diameter = 159mm Hub size = 83mm
	RXT-X(255HP,260HP)	2009~			
	GTX LIMITED IS 260	2009~			
1494	GTX 4-tech Limited Supercharge(185HP)	2003-2004	SOLAS SR CONCORD	SR-HSV-155/83 (HSV+Impeller Shaft +Bearing+OilSeal+Cone)	10 VANE Diameter = 155mm Hub size = 83mm
	GTX 4-tech Supercharge(185HP)	2003-2006			
	GTS SE 155/ RXP(155HP)	2007~			
	GTX 4-tech / GTX wake	2002~			
	GTI/ GTI SE 130	2006~			
1630	RXP-X 300 / RXT-X 300	2016~	SOLAS SXX CONCORD SOLAS SX4 CONCORD	SX-HS-161 (Original Wear Ring Replacement)	Diameter = 161mm
1494	RXP-X(255HP,260HP)	2008~2015	SOLAS SRX IMPELLER SOLAS SRZ IMPELLER	SRX-HS-159-002 (Original Wear Ring Replacement)	Diameter = 159mm
	RXT-X(255HP,260HP)	2008~			
	RXP(215HP)	2004-2010			
	RXT(215HP)	2005-2010			
	GTX Limited(215HP)	2005-			
	WAKE SUPERCHARGED(215HP)	2007-			
	GTX 4-tech Limited Supercharge(185HP)	2003-2004	SOLAS SR IMPELLER	SR-HS-156-001 (Original Wear Ring Replacement)	Diameter = 156mm
	GTX 4-tech Supercharge(185HP)	2003-2006			
	GTS SE 155/ RXP(155HP)	2007-			
	GTX / GTX 4-tech / GTX wake(155HP)	2002-			
	GTI / GTI SE 130	2006-			
951	XP / XP DI	2000-2004	SOLAS ST CONCORD	ST-HSV-155/83 (HSV+Impeller Shaft +Bearing+OilSeal +Cone)	8 VANE Diameter = 155mm Hub size = 83mm
	RX / RX DI / GTX /GTX DI	2000-2003			
	GSX Ltd. / GTX Ltd. / XP Ltd.	98-99			
	LRV / LRV DI	99-2003			
	GSX Ltd.	97			
782	3D / 3D BASE	2005-2007			
720	GTI / GTI LE / GTI RFI	2001-2005			
	GTS	2001-2002			
900	SPARK	2014-	SOLAS SK IMPELLER	SK-SV-140/75 (Stator+Cone)	12 VANE Diameter = 140mm Hub size = 75mm
				SK-HS-140	Diameter = 140mm
782	GSX RFI / GTX RFI	99-2000	SOLAS SD IMPELLERS	 SD-PM-140/60 (HSV+Impeller Shaft+Bearing+Oil Seal +Cone+Nozzle+Steering Nozzle)	6 VANE Diameter = 140mm Hub size = 60mm
	XP / SPX / GSX / GTX / GTX PRO	96-98			
720	GS	2000-2001			
	GTI / GTI LE / GTI RFI	2001-2005			
	GTS	2001-2002			
	XP / SPX	95-97			
	GS / GSI	97-99			
	GTI / GTS	96-2000			
	HX	95~			
650	XP	93-94			
	SPX / GSX / GTX	94-95			
580	XP	91-92			
	SPX	93			
	SPI	93-96			
	SP	88-96			
	GSX / GTX	92-93			
	GTS	92-96			
	GT	90-91			

The impeller is an optional part

YAMAHA Jet Pump

YAMAHA is a registered trademark of Yamaha Corporation.

Engine cc	Model	Year	Impeller Application	Recommended SOLAS Pump	Remark
701	SUPERJET	2008~	YRS-CD-12/18 YRS-CD-13/19 YRS-CD-14/20	YRS-HS-148	Diameter = 148mm
701		2008~	YRS-CD-12/18 YRS-CD-13/19 YRS-CD-14/20	YRS-SV-148/74 (Stator+Cone)	12 VANE Diameter = 148mm Hub size = 74mm
1812	FX SVHO / FX CRUISER SVHO/FZR/FZS	2014~	SOLAS YV Impeller	YVS-SV-160/74 (Stator+Cone)	12 VANE Diameter = 160mm Hub size = 74mm
1812	FX SVHO / FX CRUISER SVHO/FZR/FZS	2014~	SOLAS YV Impeller	YVS-HS-160	Diameter = 160mm
1812	FZR SHO / FZS SHO FX SHO / FX CRUISER SHO	2008-		YSS-SV-160/74 (Stator+Cone) (For 160mm impeller only)	12 VANE Diameter = 160mm Hub size = 74mm
1812	FZR SHO / FZS SHO FX SHO / FX CRUISER SHO	2008-		YVS-HS-160 (For 160mm impeller only)	Diameter = 160mm
1812	FZR SHO / FZS SHO	2008~	SOLAS YF IMPELLER	YFS-HS-155	Diameter = 155mm
	FX SHO / FX CRUISER SHO	2008~			
	VXR/ VXS	2011~			
	FX HO / FX CRUSIER HO	2009~			
1052	FX High Output	2004-2008			
	FX CRUISER High Output	2004-2008			
998	FX-140 / FX Cruiser	2003-2008			
1300	Wave Runner GP1300R	2003-2008			
	Wave Runner XLT 1200	99-2005			
1200	Wave Runner GP1200R	2000-2002			
	Wave Runner SUV1200	99-2003			
	Wave Runner XL1200	98-99			
800	Wave Runner GP800R	2001-2005			
	Wave Runner XL800	2000-2004			
1200	Wave Runner GP1200	97-99	SOLAS YD IMPELLER	YDS-HS-155	Diameter = 155mm
	Wave Runner GP1200R	99			
1100	Wave Raider 1100 / Wave Venture 1100	95-97			
760	Wave Runner XL760 / Wave Venture 760	98-99			
	Wave Blaster II	96-97			
701	Wave Runner XL700	99-2005			
800	Wave Runner GP800	98-2000	SOLAS YB IMPELLER	YBS-HS-144	Diameter = 144mm
	Wave Runner XL800	98-99			
760	Wave Runner GP760	97-2000			
	Wave Raider 760	96			
701	Wave Raider 700 / Wave Deluxe / Venture	94-97			
	Wave Blaster / Wave Runner GP700 / Pro VXR	93-97			
	SuperJet	94-2007			
	SuperJet	2008~			
701	SuperJet	2008~	SOLAS YQ IMPELLER	YQS-PM-144/74T (Housing+Stator+Nozzle +Steering Nozzle +Trim Ring+Cone)	12 VANE Diameter = 144mm Hub size = 74mm
701	SuperJet	2008~	SOLAS YQ IMPELLER	YQS-SV-144/74 (Stator+Cone)	12 VANE Diameter = 144mm Hub size = 74mm

The impeller is an optional part

Kawasaki Jet Pump

kawasaki is a registered trademark of Kawasaki Motors Crop. USA

Engine cc	Model	Year	Impeller Application	Recommended SOLAS Pump	Remark
1498	SX-R	2017~	SOLAS KGX CONCORD	KGX-PM-148/74T (Housing+Stator+Impeller Shaft+Bearing +Oil Seal+Cone+Nozzle+Steering Nozzle+Trim Ring)	12 VANE Diameter = 148mm Hub size = 74mm
1498	STX-15F	2004~	SOLAS KGX CONCORD SOLAS KG CONCORD	KGX-HSV-148/74 (Housing+Stator) KGS-HSV-148/74 WILL BE REPLACED BY KGX-HSV-148/74 AFTER INVENTORY RUN OUT.	12 VANE Diameter = 148mm Hub size = 74mm
1199	STX-12F	2003~			
1176	1200 STX-R	2002-2006			
1071	1100 STX DI	2001-2003			
	1100 STX	97-98			
	1100 ZXi	96-2003			
891	900 STX	2003-2006			
782	800 SX-R	2003~	SOLAS KP DYNAFLY	KPS-PM-140/74T (HSV+Impeller Shaft+Bearing+Oil Seal +Cone+Nozzle+Steering Nozzle+Trim Ring)	12 VANE Diameter = 140mm Hub size = 74mm

The impeller is an optional part

Hydrospace

Hydrospace is a registed trade mark of Hydrospace Group.

Engine cc	Model	Year	Impeller Application	Recommended SOLAS Pump	Remark
749	Hydrospace HSR S4	2004~	SOLAS KP CONCORD	HS-PM-140/74T (Housing+Stator+Impeller Shaft+Bearing +Oil Seal+Cone+Nozzle+Steering Nozzle +Trim Ring)	12 VANE Diameter =140mm Hub size = 74mm

The impeller is an optional part

SEA-DOO Intake Grates

Engine cc	Model	Year	Intake Grate
1494	RXP(215HP)	2004~2008	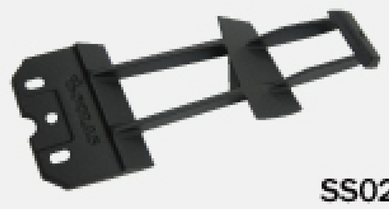 SS0205
	RXT	2005~2008	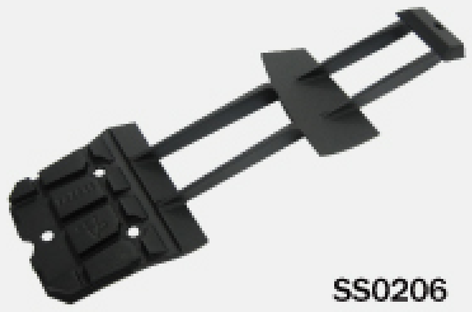 SS0206
	GTX	2004~2008	
	GTX DI	2002~2003	
951	RXX	2001-2002	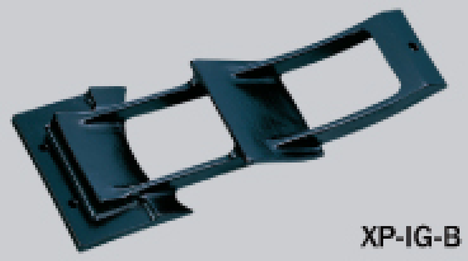 XP-IG-B
	XP/XP DI	2000-2004	
	XP Ltd.	98-99	
	RX / RX DI	2000-2003	
782	XP	97-98	
720	GTI/GTI LE/GTI RFI	2001-2005	
	GTS	2001-2002	
951	GTX Ltd.	98-99	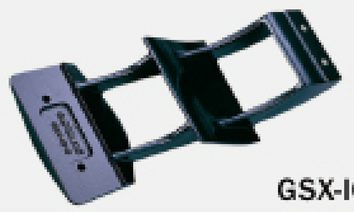 GSX-IG-B
	GTX/GTX DI	2000-2001	
	GSX Ltd.	98-99	
	LRV / LRV DI	99-2003	
	GSX Ltd.	97	
782	GSX RFI	99-2000	GTX-IG-B
	GTX RFI	99-2002	
	GTX PRO	98	
	GSX	96-98	
720	GS	98-2001	
	GTI	98-2000	
782	XP	95-96	SD-IG-B
	SPX	97-98	
720	XP	95	
	SPX	96	
	SPX	97	
	GS	97	
	GSI	97-98	
	GTI	96-97	
	GTS	97-2000	
	HX	95~	
650	XP	93-94	
	SPX	94-95	
	GSX	94-95	
	GTX	94-95	
	XP	91-92	
	SPX	93	
	SPI	93-96	
	SP	88-96	
	GSX	92-93	
	GTX	92-93	
	GTS	92-96	
	GT	90-91	

SEA DOO is a registered trademark of Bombardier Recreational Products Inc.

YAMAHA Intake Grates

Engine cc	Model	Year	Intake Grate
1052	FX High Output	2004~07	SY0303
	FX CRUISER High Output	2004~07	
701	Wave Blaster	93-97	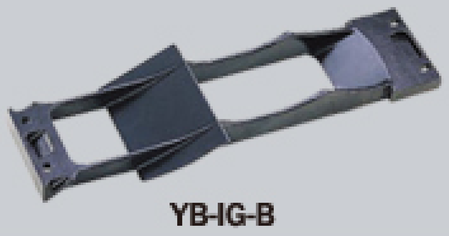 YB-IG-B
	Superjet	94~	

YAMAHA is a registered trademark of Yamaha Corporation.

Kawasaki Intake Grates

Engine cc	Model	Year	Intake Grate
1176	ULTRA 150	99-2006	KH-IG-B
1071	ULTRA 130 DI	2001-2006	
750	750 SX	92-96	KE-IG-B
	750 SXi	95-96	
	750 XiR	94	

kawasaki is a registered trademark of Kawasaki Motors Crop. USA

HONDA Intake Grates

Engine cc	Model	Year	Intake Grate
1235 Turbo	F-12X	2002~2007	HW1-IG-B
1235	F-12	2002~2007	

Honda is a registered trademark of Honda Motors Co., Inc.

POLARIS Intake Grates

Engine cc	Model	Year	Intake Grate
1165	Pro 1200	2000-2002	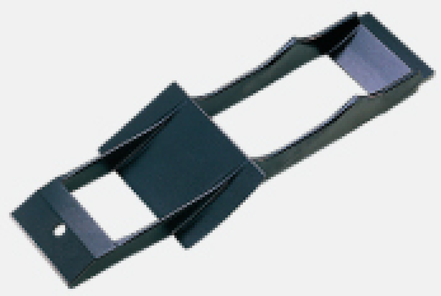 PL-IG-B
	VIRAGE TX	2000-2002	
	VIRAGE TXi	2001-2002	
1050	SL 1050	97	
	SLX 1050	99	
	SLXH 1050	98	
	SLTX	96-98	
900	SL900	96-97	
779	SLX Pro 785	96-2001	
	SL 780	96-97	
	SLT 780	96-97	
777	VIRAGE I	2002-2004	
744	SL 750	94-95	
	SLT 750	94-95	
	SL750	93	
700	VIRAGE	2000-2004	
	SLH	98-2001	
	SL 700DLX	97	
	SL 700	96-97	
	Hurricane	96-97	

Polaris is a registered trademark of Polaris Industries Inc.

SEA DOO

Impeller Accessories & Installation Guide

SEA DOO is a registered trademark of Bombardier Recreational Products Inc.

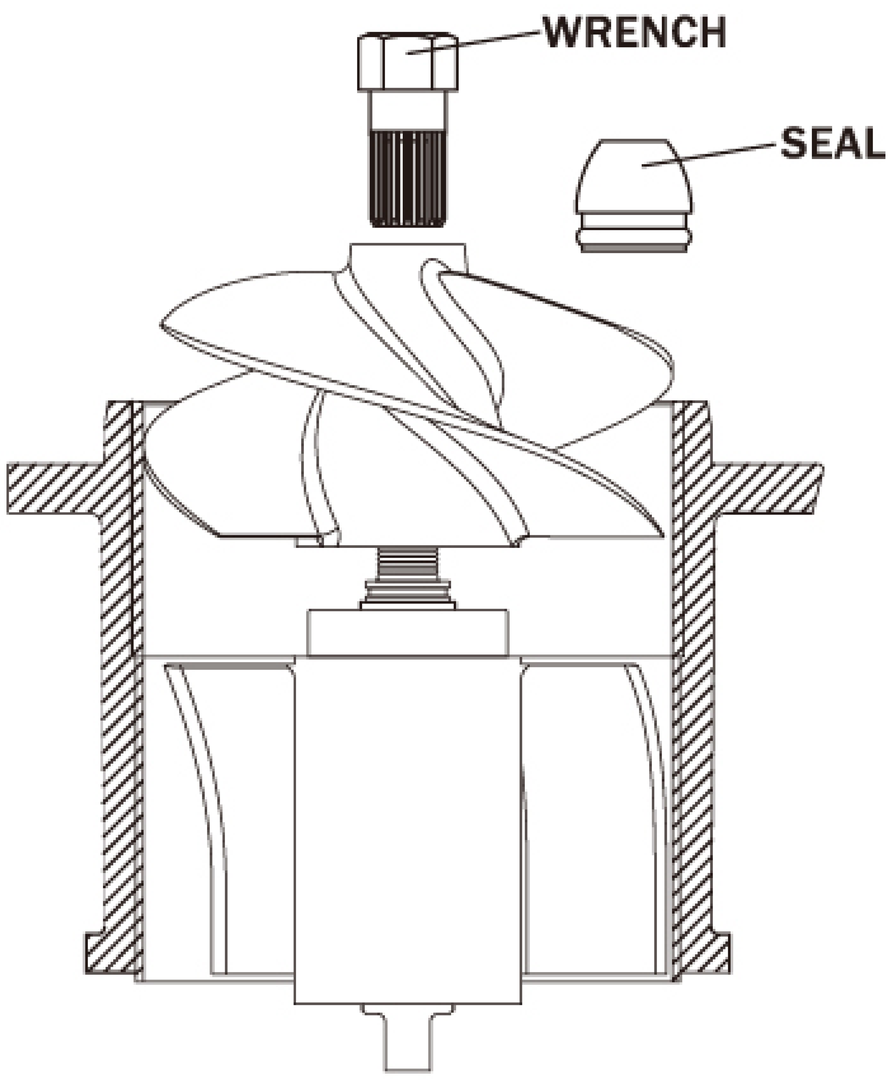

1.Remove and separate the whole jet pump from the PWC.
2.Remove the trail cone (or cap) from the stator.
3.Hold the rear end of the shaft with a bench vise.
Remove the impeller with an impeller wrench(optional part).
Turning counter clockwise will loosen the impeller.
4.Visually inspect thread on shaft & impeller for debris or damage. Apply grease or anti-seize on the thread before installation.
5.Screw in the impeller by hand; please be careful of the sharp edges of the impeller. Tighten with the impeller wrench. If the impeller feels too tight or not threaded properly, unscrew the impeller, clean and check the thread.
6.Assemble the pump and refill O/E pump oil or grease to spec.

SEADOO		
Impeller Series	Wrench	Seal
SD Super Camber(ABC Series) Super Camber(IJK Series)	 optional part	
	WR001	SL007
SD, ST Xprop Series	 optional part	
	WR001	SL007
SD, SF, ST Concord Series ST Dynafly Series	 optional part	
	WR001	SL007
SG Concord Series	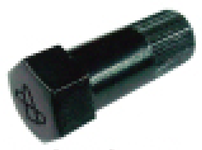 optional part	Original Seal required
	WR011	
SK Concord Series	 optional part	
	WR001	SL009
SR Concord Series	 optional part	 SLA011 SLA011A
	WR011	SLA011(For shaft 24mm) SLA011A(For shaft 27mm)
SRB SRZ SRX SXX / SX4 Concord Series	 optional part	
	WR012	SLA012
SX4 SRZ TP Series & FLY Series		Not Required
	WR012L	

＊Some of wrenches are the optional part. You can buy them from SOLAS local dealer

*For SLA012 seal,be sure to tighten it by hand tool

＊This installation guide is suggested for reference only.
（Please refer to your original service manual or contact your PWC Dealer for detail.）

YAMAHA Impeller Accessories & Installation Guide

YAMAHA is a registered trademark of Yamaha Corporation.

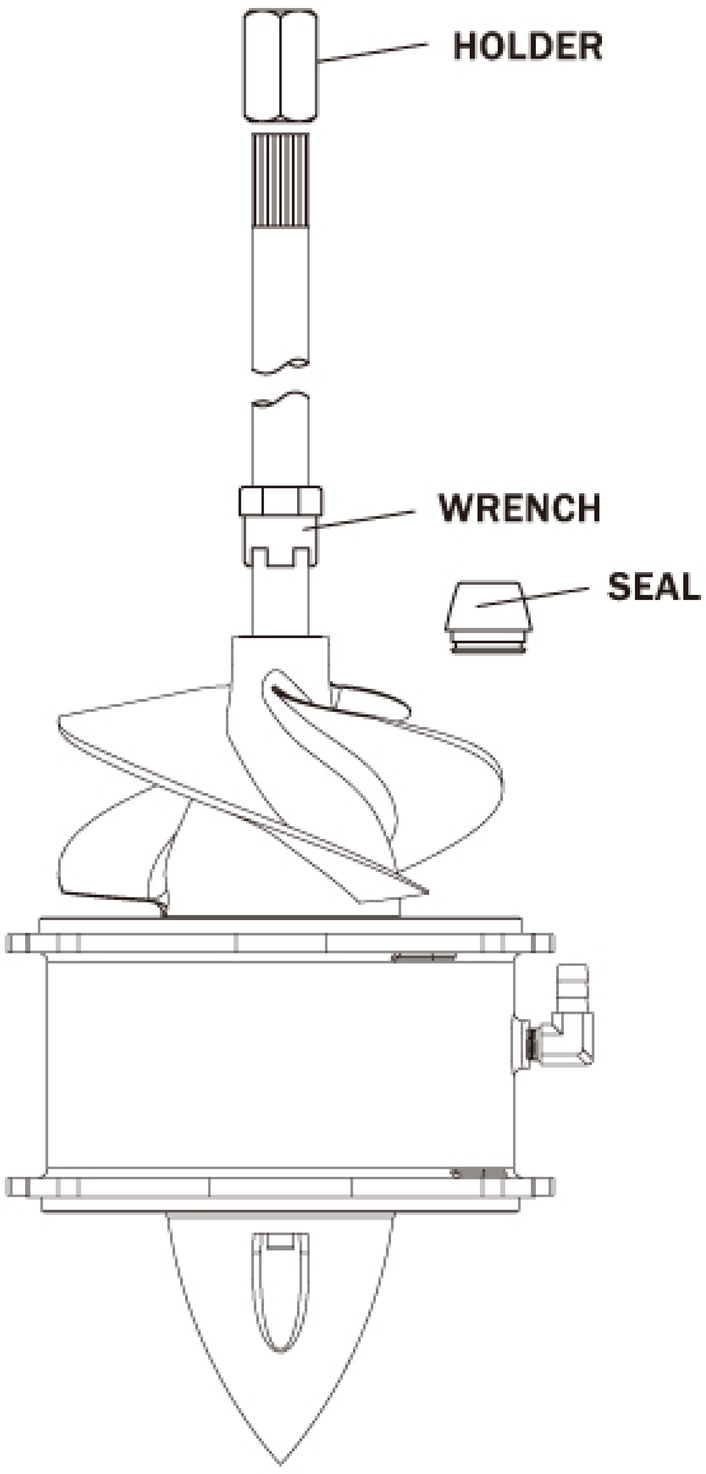

1.Remove and separate the whole jet pump from the PWC.
2.Hold the front end of the drive shaft with a shaft holder (optional part) on bench vise.
3.Remove the impeller （a free impeller wrench is included when purchase a new SOLAS Impeller）.Turning clockwise will loosen the impeller.
4.Visually inspect thread on shaft & impeller for debris or damage. Apply grease or anti-seize on the thread before installation.
5.Screw in the impeller by hand; please be careful of the sharp edges of the impeller. Tighten with the impeller wrench. If the impeller feels too tight or not threaded properly, unscrew the impeller, clean and check the thread.
6.Assemble the pump and refill O/E pump oil or grease to spec.

＊Some of holders are the optional part. You can buy them from SOLAS local dealer.

＊This installation guide is suggested for reference only.
（Please refer to your original service manual or contact your PWC Dealer for detail.）

YAMAHA				
Impeller Series	Wrench	Holder	Seal	
YA Super Camber(ABC Series)		optional part		
	WR003	WR003H	SL003	
YB Super Camber (IJK Series) Xprop Series Concord Series		optional part	SLA008	SL008A
	WR004	WR004H	SLA008(For shaft 18mm) SL008A(For shaft 15mm)	
YD Super Camber (IJK Series) Xprop Series		optional part		
	WR004	WR004H	SLA008	
YD Concord Series		optional part		
	WR007	WR004H	SLA009A	
YF / YX Concord Series Xprop Series YG Dynafly Series		optional part	NEW!	
	WR007	WR007H	SLA018	
YRS YQ Concord Series		optional part		
	WR007	WR004H	SL007	SL009
YS Dynafly Series YV Concord Series		optional part		
	WR014	WR014H	SLA014	
YV Concord Series (*HUB WITH A) YS Dynafly Series (*HUB WITH A) YS Concord Series		optional part		
	WR014A	WR014H	SLA016	
YS YV TP Series & FLY Series		optional part	TP Series	FLY Series
	WR015	WR014H	SLA016	SLA017

*HUB WITH A

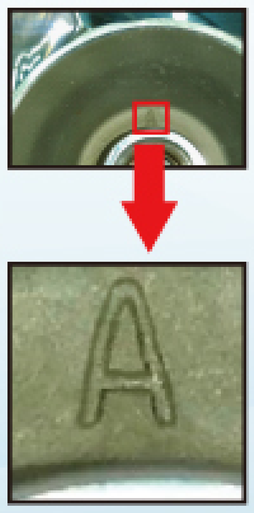

YAMAHA Impeller Accessories & Installation Guide

YAMAHA is a registered trademark of Yamaha Corporation.

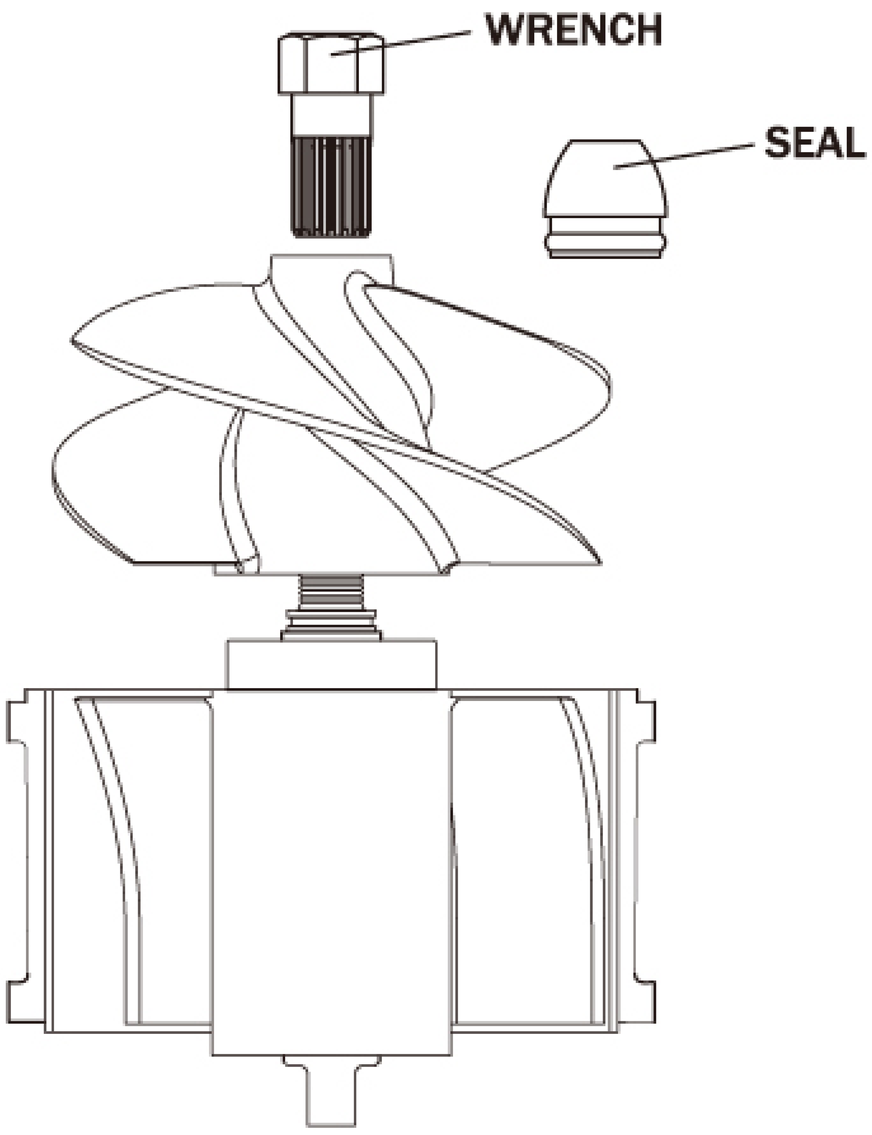

YAMAHA		
Impeller Series	Wrench	Seal
YJ YH Concord Series	 optional part	
	WR001	SLA018

＊Some of wrenches are the optional part. You can buy them from SOLAS local dealer

1.Remove and separate the whole jet pump from the PWC.
2.Remove the trail cone (or cap) from the stator.
3.Hold the rear end of the shaft with a bench vise. Remove the impeller with an impeller wrench（optional part）. Turning counter clockwise will loosen the impeller.
4.Visually inspect thread on shaft & impeller for debris or damage. Apply grease or anti-seize on the thread before installation.
5.Screw in the impeller by hand; please be careful of the sharp edges of the impeller. Tighten with the impeller wrench. If the impeller feels too tight or not threaded properly, unscrew the impeller, clean and check the thread.
6.Assemble the pump and put it back on the PWC.

＊This installation guide is suggested for reference only.
（Please refer to your original service manual or contact your PWC Dealer for detail.）

Kawasaki Impeller Accessories & Installation Guide

kawasaki is a registered trademark of Kawasaki Motors Crop. USA

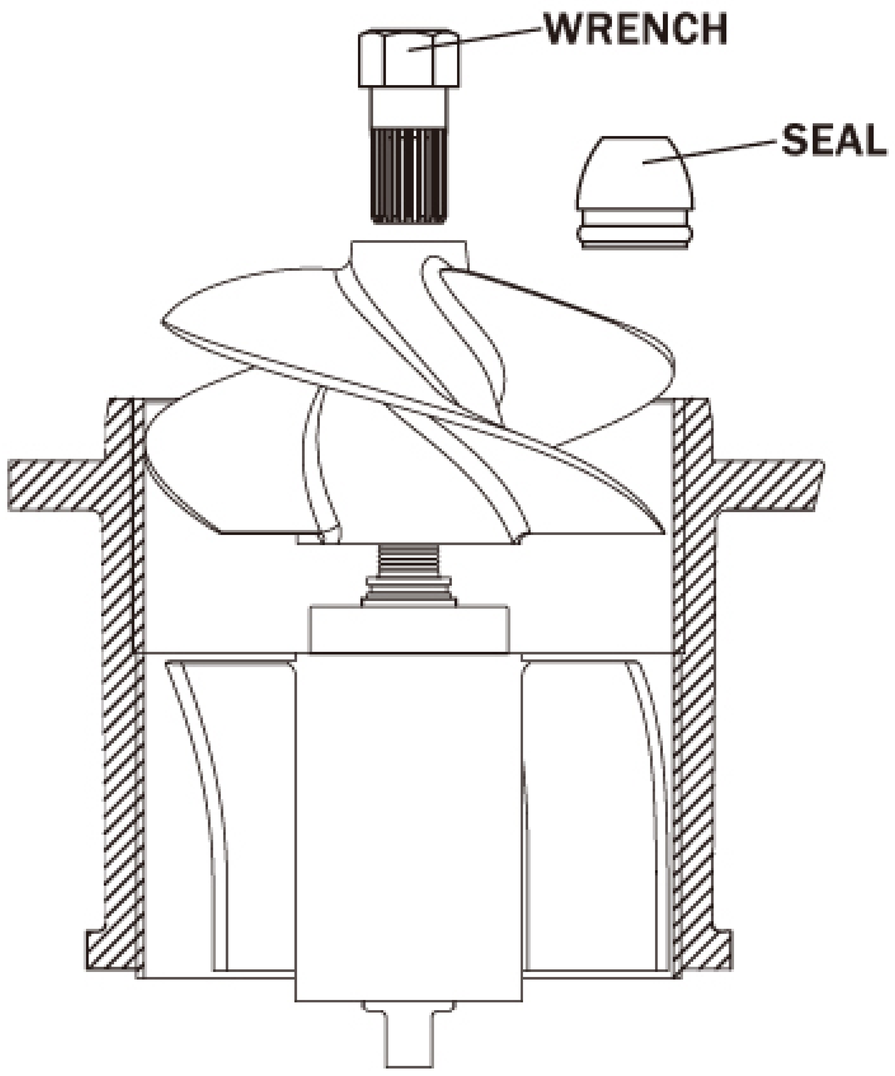

1.Remove and separate the whole jet pump from the PWC.
2.Remove the trail cone (or cap) from the stator.
3.Hold the rear end of the shaft with a bench vise.
Remove the impeller with an impeller wrench(optional part).
Turning counter clockwise will loosen the impeller.
4.Visually inspect thread on shaft & impeller for debris or damage. Apply grease or anti-seize on the thread before installation.
5.Screw in the impeller by hand; please be careful of the sharp edges of the impeller. Tighten with the impeller wrench. If the impeller feels too tight or not threaded properly, unscrew the impeller, clean and check the thread.
6.Assemble the pump and put it back on the PWC.

＊Some of wrenches and seals are the optional part. You can buy them from SOLAS local dealer.

＊This installation guide is suggested for reference only.
（Please refer to your original service manual or contact your PWC Dealer for detail.）

KAWASAKI		
Impeller Series	Wrench	Seal
KA Super Camber(ABC Series) Super Camber(IJK Series)	optional part WR001	SLA009
KB Super Camber(ABC Series)	WR002	SL002
KC Super Camber(ABC Series)	WR005	Original Seal Required
KD Super Camber(ABC Series)	optional part WR001	SLA009
KE Super Camber(ABC Series) Super Camber(IJK Series) Xprop Series,Concord Series KP Concord Series,Dynafly Series	optional part WR001	SLA009
KF Super Camber (IJK Series) Xprop Series	optional part WR001	SLA009
KX Concord Series	optional part WR001	SL009
KH Dynafly Series	optional part WR001	SL007
KG Xprop Series Concord Series KR KGX Concord Series	optional part WR001	SL009

SOLAS®
Where Speed Begins

HONDA
Honda is a registered trademark of Honda Motors Co., Inc.

POLARIS
Polaris is a registered trademark of Polaris Industries Inc.

TIGERSHARK Impeller Accessories & Installation Guide

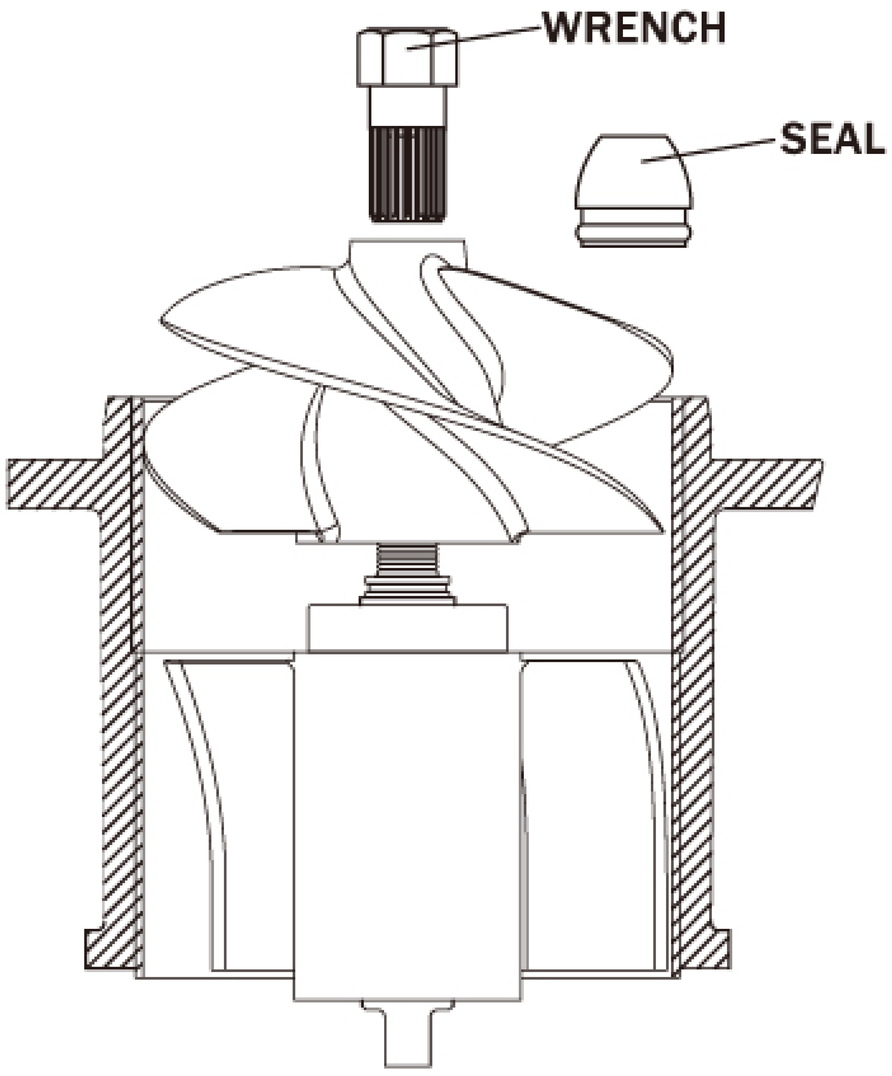

1.Remove and separate the whole jet pump from the PWC.
2.Remove the trail cone (or cap) from the stator.
3.Hold the rear end of the shaft with a bench vise.
Remove the impeller with an impeller wrench(optional part).
Turning counter clockwise will loosen the impeller.
4.Visually inspect thread on shaft & impeller for debris or damage. Apply grease or anti-seize on the thread before installation.
5.Screw in the impeller by hand; please be careful of the sharp edges of the impeller. Tighten with the impeller wrench. If the impeller feels too tight or not threaded properly, unscrew the impeller, clean and check the thread.
6.Assemble the pump and put it back on the PWC.

HONDA		
Impeller Series	Wrench	Seal
HA Concord Series	 optional part	
	WR001	SLA010
POLARIS		
Impeller Series	Wrench	Seal
PL Super Camber (ABC Series) Super Camber (IJK Series)	 optional part	
	WR006	SL006
PA Super Camber (ABC Series) Super Camber (IJK Series) Xprop Series Concord Series	 optional part	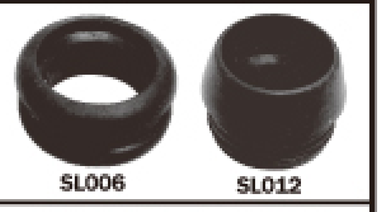 SL006 SL012
	WR006	SL006, SL012
PF Concord Series	 optional part	
	WR006	SL009
TIGER SHARK		
Impeller Series	Wrench	Seal
TA Super Camber (IJK Series)	Original Wrench / Seal Required	
TB Super Camber (IJK Series) Xprop Series	 optional part	
	WR006	SL009

＊Some of wrenches and seals are the optional part. You can buy them from SOLAS local dealer

＊This installation guide is suggested for reference only.
（Please refer to your original service manual or contact your PWC Dealer for detail.）

SOLAS®
Where Speed Begins

Building a Global Marketing Network

See our website http://www.solas.com for a complete list of distributors and dealers worldwide.

● SOLAS Map of World Distributors.

From its roots in Taiwan, SOLAS looks to the global market for development. SOLAS has established a global marketing network and has built long-term strategic alliances with world-class companies.

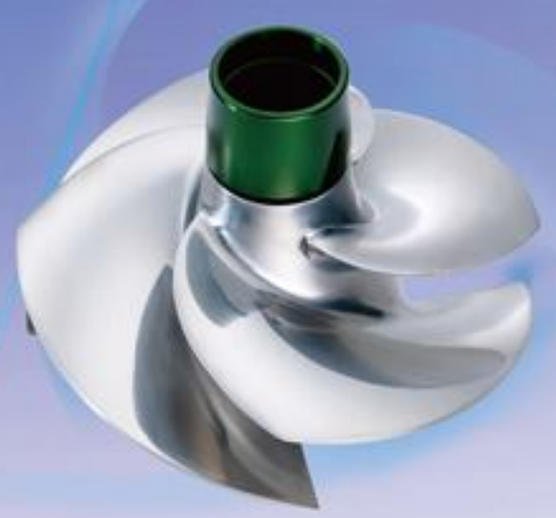

SOLAS
www.solas.com

SOLAS®

Where Speed Begins

Solas Science & Engineering Co., Ltd.

37, 35th Road, Taichung Industrial Park,
40768 Taichung, Taiwan, R.O.C.

Tel: +886-4-2359-7455
Fax: +886-4-2359-7535

E-mail: market@solas.com.tw

http://www.solas.com

8 24375 05246 0

9990414 AUG.2019